marzocchi

Performance is an attitude

9001458 FORK MANUAL

TENNECO

WARNING!

Per la versione completa del manuale d'uso riferirsi al sito www.marzocchi.com

You can download the complete version of the owner manual from internet at www.marzocchi.com

SUMMARY

COUNTRY	LANGUAGE	CODE	GENERAL WARNING	OWNER MANUAL	WARRANTY
GB	**ENGLISH**	UK	**4**	**5**	**15**

	CROSS COUNTRY
	WARNING
	USE ONLY FOR
	CROSS COUNTRY
	DO NOT USE FOR
	TRAIL 4X ENDURO DIRT JUMPING FREERIDE/ DOWNHILL
320	•
CORSA	•
MARATHON	•
44	
350	
55	
SLOPE CR	
DIRT JUMPER	
380	
888	

Table 1 - *Intended use chart*

TENNECO – MARZOCCHI

INTENDED USE CHART

WARNING!

Failure to properly match your forks to your frame or riding style could cause the forks to fail, resulting in loss of control of the bicycle, an accident, serious injury or death.

For Proper Use Instructions, See Owners Manual or www.marzocchi.com

TRAIL	ENDURO	DIRT JUMPING	FREERIDE/ DOWNHILL	
WARNING	**WARNING**	**WARNING**	**MAY BE USED FOR ANY RIDING STYLE**	
USE ONLY FOR	**USE ONLY FOR**	**USE ONLY FOR**		
CROSS COUNTRY TRAIL	CROSS COUNTRY TRAIL 4X ENDURO	CROSS COUNTRY TRAIL 4X ENDURO DIRT JUMPING		
DO NOT USE FOR	**DO NOT USE FOR**	**DO NOT USE FOR**		
4X ENDURO DIRT JUMPING FREERIDE/ DOWNHILL	DIRT JUMPING FREERIDE/ DOWNHILL	FREERIDE/ DOWNHILL		
				320
				CORSA
				MARATHON
•				**44**
	•			**350**
	•			**55**
		•		**SLOPE CR**
		•		**DIRT JUMPER**
			•	**380**
			•	**888**

ENGLISH

I. USE OF THIS MANUAL

I.I General warnings

WARNING!

Descriptions preceded by this symbol contain information, instructions, or procedures, which, if not followed, can result in damage or malfunction of the suspension, environmental damages, accidents, personal injury or death.

REMEMBER

Descriptions preceded by this symbol contain information, or procedures recommended by Tenneco Marzocchi for optimum use of the suspension.

WARNING!

Failure to follow the warnings and instructions could result in malfunction, accidents, personal injury or death.

WARNING!

Failure to properly match the suspensions to your frame could cause malfunction of the suspension, resulting in a loss of control of the bicycle, and possible serious injury or death to the rider.

Please note that throughout this manual, reference is made that "accidents" could occur. Any accident could result in loss of bicycle control, damage to your bicycle or its components, and more importantly, cause you or a bystander to sustain severe personal injury or death.

Please be advised that suspension system installation, service and repair tasks require specialized knowledge, tools and experience. General mechanical aptitude may not be sufficient to properly install, service or repair your suspension system. Installation and maintenance of the suspension system must be carried out only by an authorized Marzocchi Service Center. Improper installation, service or repair may lead to accidents, resulting in personal injury or death.

For further information, please consult the www.marzocchi.com web site or contact your nearest Marzocchi Service Center. A list of service centers can be found on our web site.

I.II General safety recommendations

Never make any modifications whatsoever to any component of the suspension system. The components of the Marzocchi suspension system are designed as a single integrated system. To avoid compromises in terms of safety, performance, durability and function, use only original Marzocchi components for substitution.

It is necessary to learn how to ride your bike without going beyond your personal capabilities. Always use the proper safety equipment, and ensure that all your riding equipment is in excellent condition.

Damage to your suspension can occur if your bicycle strikes any overhead object, such as garages, bridges, tree limbs or other obstacles, while attached to a bicycle carrier, at any speed.

Always check your suspension and if there are deformations, cracks, impact marks, stress marks or bent parts, no matter how slight, it is necessary to have the suspension checked by an authorized Marzocchi Service Center.

The suspension system will show signs of wear and tear through time. Have your bike periodically checked for oil leaks, cracks, chips or other signs of wear and tear by an authorized Marzocchi Service Center.

When using a bicycle carrier (car roof rack or rear-hitch mount), be sure to fully loosen the quick release fastener on the carrier when mounting or removing your bicycle. Additionally, be sure to always keep your bicycle in a vertical position when mounting or removing your bicycle to and from the bicycle carrier. Failure to fully loosen the quick release fastener, or any bending action while mounting or removing your bicycle to and from the carrier, could result in scratching, bending, or cause other damages your suspension system.

Learn and follow the local bicycle laws and regulations, and obey all traffic signals, signs and laws while you ride.

Always wear a properly fitted and fastened bicycle helmet that has been approved by ANSI, SNELL or CE, and any other safety equipment necessary for your riding style.

When riding in wet conditions, remember that the stopping power of your brakes is greatly reduced and that the adherence of the tires on the ground is considerably reduced. This makes it harder to control and stop your bicycle. Extra care is required when riding your bicycle in wet conditions to avoid an accident.

Avoid riding at night because it is more difficult for you to be seen by traffic, and it is more difficult for you to see obstructions on the ground. If you do ride at night, or in conditions of poor visibility, equip your bicycle with and use a headlight and a taillight. Wear clothes that are snug-fitting and that make you visible to traffic, such as neon, fluorescent, or other bright colors.

Carefully read and follow all instructions and warnings supplied.

WARNING!

Marzocchi suspension systems cannot be used on any motorized bicycle or vehicle, or on any means of transportation designed to carry more than one person.

I.III Before every ride

WARNING!

Do not ride your bicycle if it does not pass this pre-ride test.

Check your suspensions for any leaks or other traces of oil, which is indicative of a problem with your suspension. Be sure to turn your bicycle upside down to check areas such as the underside of the crown for evidence of an oil leak.

Be sure that all components of the suspensions and the bicycle, including the brakes, pedals, handgrips, handlebars, frame and seating system, are in optimum condition and suitable for use.

Be sure that none of the components of your suspension system or of the bicycle are bent, deformed or otherwise damaged.

Check that all quick release fasteners, nuts and bolts are properly fastened. Bounce the bicycle on the ground while listening and looking for anything that may be loose.

Be sure that your wheels are perfectly aligned. Spin the wheels to ensure that they do not wobble up and down or from side to side, and that they do not make contact with the suspension legs or brake pads while rotating.

Be sure that all cables and other components of your braking system are in their proper position, properly adjusted and that your braking system is functioning properly.

Be sure that your tires are inflated to the correct pressure and that there is no damage whatsoever in the tread or sidewall of the tire.

Check that all reflectors are clean, straight and securely mounted.

II. INTENDED USE INSTRUCTIONS

II.I Select the correct riding style

Marzocchi suspensions are among the most durable and technologically advanced suspension systems on the market today. However, no suspension can withstand misuse, abuse or improper use that, over a short period of time, can cause your suspensions to fail when you least expect it. It is critical that you select and use the suspension system that is appropriate for your riding style, and that you use it properly.

Select the suspension that is appropriate for your riding style by referring to the table «intended use chart» (Table 1, page 2). Please see your Marzocchi retailer, or contact Marzocchi directly, if you require assistance in selecting the correct suspension.

II.II Identifying your intended use

CROSS COUNTRY: Riding along hilly trails where some bumps and smaller obstacles, such as rocks, roots, or depressions, may be encountered. CROSS COUNTRY riding does not include jumps or "drops" (riding off rocks, fallen trees or ledges) from any height. These forks must be used with tires specifically designed for CROSS COUNTRY riding, and disk, rim or linear pull brakes. You should only attach generators and racks, if any, to the designated mounting points provided on the forks.

TRAIL: This riding style is for skilled Cross Country riders, and involves moderately steep slopes and medium sized obstacles. TRAIL forks should be used only with rim or linear pull brakes or with disk brakes, and those frames, wheels and other components specifically designed for this riding style. The brakes must be attached to the designated mounting points provided on the fork. Never make any modification to your fork when attaching any equipment.

4X: This riding style is similar to "BMX RACE," and is for skilled riders only. To be performed on dedicated courses made of dirt, rocks and wooden features. Such courses are composed of jumps shaped for smooth landing and banked corners that help the rider maintain speed and avoid excessive impact. This riding style does not include riding on, around, or over urban obstacles, or extreme dirt jumps.These forks should only be used with disk brakes, and those frames, wheels and other components specifically designed for this riding style. The disk brakes must be attached to the designated mounting points provided on the fork. Never make any modification to your fork when attaching any equipment.

ENDURO: This riding style is for skilled riders, and involves steep, aggressive slopes, large obstacles, and moderate jumps. ENDURO forks should be used only with disk brakes, and those frames, wheels and other components specifically designed for this riding style. The disk brakes must be attached to the designated mounting points provided on the fork. Never make any modification to your fork when attaching any equipment.

DIRT JUMPING: This "BMX" or "motocross" style of riding is only for the most skilled riders, and involves jumping from one mound of dirt to another. It also includes riding over and around "urban obstacles" such as man-made, or other concrete, structures, or racing on a track consisting of jumps made from mounds of dirt which the rider must negotiate by jumping or turning at speed. These forks should only be used with disk brakes, and those frames, wheels and other components specifically designed for this riding style. The disk brakes must be attached to the designated mounting points provided on the fork. Never make any modification to your fork when attaching any equipment.

FREERIDE/DOWNHILL: This discipline is only for professional or highly skilled riders. It includes relatively high jumps or "drops' and negotiating larger obstacles such as boulders, fallen trees, or holes. These forks should be used only with disk brakes, and those frames, wheels and other components specifically designed for this riding style. The disk brakes must be attached to the designated mounting points provided on the fork. Never make any modification to your fork when attaching other equipment.

WARNING!

Failure to properly overcome obstacles on the trail, or failure to properly land after a jump or drop, could cause your suspensions to fail, resulting in a loss of bicycle control, serious injury, or death to the rider.

Learn how to properly flow around obstacles on the trail. Hitting obstacles such as rocks, trees or holes straight-on puts forces on your suspension it was not designed to absorb. Landing improperly after a jump or drop also puts forces on your suspension it was not designed to absorb.

You should only perform jumps or drops when a transition, or down ramp, is available to help your bicycle absorb the impact forces generated during the landing by having both wheels smoothly make contact with the transition, or down ramp, at the same time. Any other type of landing is dangerous, as it could result in accidents or damages to the components.

Ensure that the steepness and length of the transition, or down ramp, are suitable for the height from which you jump or drop and that you are skilled enough to perform them.

1. INTRODUCTION

1.1 Conventions

1.1.1 Orientation of the fork

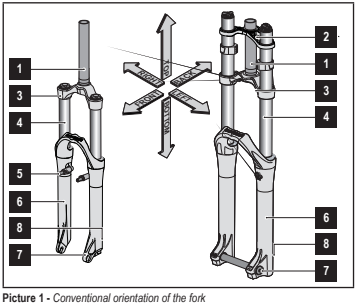

Picture 1 - *Conventional orientation of the fork*

1.1.2 Main parts of the fork

1. Steer tube, 2. Upper crown, 3. Lower crown, 4. Stanchion tube, 5. Brake boss, 6. Monolite, 7. Dropout, 8. Disc brake mount.

2. TECHNICAL INFORMATION

2.1 Spring system

Inside MARZOCCHI forks you will find coil springs, or air, used as suspension mechanism.

2.2 Damping system

The damping load that is generated during compression and rebound of the fork legs can be adjusted by hydraulic valve pumping rods, or by special cartridges.

WARNING!

NEVER use the compression lock position while riding downhill as the fork will not react properly when hitting obstacles, and can result in a loss of control of the bicycle, an accident, personal injury, or death.

Model	Elastic system				Hydraulic system							
	Spring		Air		DBC						Open Bath	Sealed
	Coil preload with mechanical adjuster	Coil preload with air	AER	SWITCH TA	C2R2	NCR	CR	R	LCR	LR	RV	TST MICRO
320 LCR CARBON			●						●			
320 LCR			●						●			
320 LR			●							●		
CORSA LR			●							●		
MARATHON LR			●							●		
44 MICRO STA				●								●
350 NCR			●			●						
350 NCR TITANIUM		●				●						
350 CR			●				●					
350 R		●						●				
55 CR			●				●					
55 R		●						●				
SLOPE CR			●				●					
DIRT JUMPER 1		●									●	
DIRT JUMPER 2		●									●	
DIRT JUMPER 3	●											
380 C2R2 TITANIUM	●				●							
380 C2R2	●				●							
380 CR	●						●					
888 CR	●						●					

Table 1 - *Technology and Adjustment*

DBC

DBC Hybrid Technology: The Dynamic Bleed Cartridge is the most efficient riding control solution! The DBC takes advantage of ALL of the most popular features of the damping systems on the market: open bath and sealed cartridge. Based on hybrid technology the DBC cartridge is a low pressure system with a compensation reservoir controlled by a coil spring instead of an air pressurized chamber. The oil flows through two different circuits, so that in the case of extreme riding, the DBC allows the fluid to rush out of the cartridge when the system gets under too high pressure. The oil will then be sucked back inside the cartridge again through a one way seal, stopping the air from mixing with the fluid. This assures that the sliders are constantly lubricated and each single damping tuning step is effective and consistent in the roughest riding sessions. Combining the excellent damping of Open Bath Technology with the light weight of a closed cartridge, the DBC is a unique feature that you can only find in the Marzocchi Suspension systems:

DBC C2R2	Pos.		
With the DBC C2R2 system every rider will be able to find the perfect setting! There is now High and Low speed control for both compression and rebound with the option of self-tuning compression shims by easily removing the stack from the top of the right stanchion tube. The DBC CR2R is a revolutionary design that allows riders to customize the settings for their personal riding style and skills. It allows the control of the mid compression speed without needing to disassemble the complete fork or to bleed the oil cartridge. This works thanks to a three way oil flow circuit in the compression unit: a main circuit for the low speed damping controlled by a needle, and two different concentric circuits on the piston controlled by the shim stack. The first works on the mid speed compression and is managed by the flex of the shims. The second, for the high speed, moves the complete stack away allowing the oil to flow with minimum resistance. High speed compression can be tuned with the outer knob on the top of the right stanchion, preloading the spring that keeps the stack in position. Mid compression speed is also tunable by changing the shim thickness and controlling the progression between high and low speed damping.	^ ^	gold	Low speed compression
	^	orange	High speed compression
	v	smoke grey	High speed reboud
	v v	red	Low speed rebound

DBC NCR	Pos.		
DBC NCR is the ideal combination between motorcycle technology and enduro competition needs. Smooth damping, reliable and low maintenance as an open bath system but light weight as a sealed cartridge at the same time. Low speed compression and rebound can be adjusted by turning the knobs, both with a plus: the high speed rebound can be tuned by upgrading to a custom shim stack and the compression can be slowed down during the climb! This super efficient NCR cartridge can also be combined with the new and ergonomically designed remote control making your ride faster and safer.	^ ^	gold	Compression
	^	black	Climb Compression
	v	red	Rebound

DBC CR	Pos.		
The DBC CR cartridge offers control of the rebound and compression low speed. This will keep the suspension smooth and the tires glued to ground, no matter the riding style or the terrain you are riding on. The high speed compression can be tuned by upgrading to a custom shim stack.	^	gold	Compression
	v	red	Rebound

DBC R	Pos.		
Easy to set, the DBC R cartridge is the first step into the high performing suspension market. Adjusting the low speed rebound ensures constant and consistent riding control, increasing the feel of confidence with the bike and the trail.	v	red	Rebound

DBC LCR	Pos.		
With the DBC LCR the low speed compression and rebound can be adjusted by turning the knobs, both with a plus: the high speed rebound can be tuned by upgrading to a custom shim stack and the compression can be fully locked to challenge each climb! The internal blow-off valve will always keep the system safe, for that time when you accidentally hit the trail forgetting to unlock the fork.	^ ^	gold	Compression
	^	black	Lockout
	v	red	Rebound

DBC LR	Pos.		
The DBC LR utilizes low speed rebound control combined with an efficient compression lockout, which makes it a fantastic choice for cross country and all mountain enthusiasts.	^	black	Lockout
	v	red	Rebound

OPEN BATH			
RV	Pos.		
The RV (Rebound Valve) pumping element is the evolution of the well-proven SSVF Open Bath system. This system controls the rebound speed. If you correctly adjust the red-coloured knob on the lower part of the fork leg, you can keep the wheel on contact with the soil in all riding conditions.	v	red	Rebound

SEALED			
TST MICRO (Terrain Selection Technology With Micro Adjuster)	Pos.		
TST Micro is the greatest evolution of TST closed cartridge hydraulic systems. The red knob installed in the lower part of the fork leg adjusts the rebound. The black-coloured top knob sets Micro System to adjust the compression. The Micro adjustment (golden knob on the top of the fork leg) sets the operating threshold of compression by adapting the behaviour of the suspension system to the type of terrain. Lockout is activated by turning the golden knob completely in the closed position, then shifting the red lever. In some models, the TST system can be operated through the remote control on the handlebar.	^ ^	gold	Compression/ Blow Off
	^	black	Lockout
	v	red	Rebound

AIR SYSTEMS			
AER	Pos.		
By means of a single Schrader air valve in the upper or lower part of the fork leg, depending on the model, the AER pneumatic cartridge allows a perfect and simple adjustment of the pressure in the positive air chamber.	^	Ti grey	Air spring
STA (Switch-TA)	Pos.		
The STA cartridge has the functionalities of the AER system. It allows easy setting by means of a single air valve installed in the lower part of the fork leg. In addition, the STA cartridge, by means of the rotation of the Silver-coloured STA knob installed on the top of the fork leg, allows adjustment of the fork height and travel without affecting the damping system.	^	Smoke grey	Travel adjust
	v	Ti grey	Air spring

SPRING PRELOAD	Pos.		
Coil preload with mechanical adjuster	^	Ti grey	Spring preload
Coil preload with air	^	Ti grey	Spring preload

Table 2 - *Technology and Adjustment - Detail*

2.3 Lubrication and cooling

The forks can use different lubrication and cooling technologies.

In Open Bath systems, the oil inside the fork leg, besides being a crucial element for the hydraulic operation, accomplishes all cooling and lubrication needs for the internal sliding parts. In addition, if the oil volume is varied within the recommended ranges, it will be an additional setting element, thus allowing the modification of suspension system's progressivity. Compared to the systems equipped with sealed cartridges, the Open Bath system allows increased lubrication for the operation of the sliding parts.

The Open Bath system assures an excellent lubrication from the very first "bottoming" of the fork, as well as in all use and weather conditions.

In the systems equipped with sealed cartridge, special grease or oil is used for the lubrication of the internal sliding parts. The aforesaid lubricant does not work as additional setting element; therefore, the pre-established levels must be carefully observed.

The best lubrication of the internal parts is achieved during use, when the stress and the bottoming of the fork allow the oil to lift due to "chattering" from the bottom of the fork leg until reaching and lubricating the bushings.

2.4 Sliding bushing and oil seals

The guide of the stanchion tubes inside the sliders is formed by two bushings utilizing an advanced Teflon® facing, with very low static friction.

In 44, 350, 55, 380, 888, 320, Corsa and Marathon models the notorious smoothness of Bomber models has been increased further, thanks to the use of these newly designed bushings and seals offering a coefficient of friction that is 30% lower than previously obtainable. These new bushings and seals have proven to give better consistent performance over time. This allows the optimum combination between the fork legs and the sliders. The new bushings have slots that help the oil to go up and improve the lubrication, thus offering an incomparable smoothness. At the top end of the monolite, there is a sealing group that prevents oil leakages, as well as the access of contaminating agents into the lubricant and into the hydraulic cartridges.

3. INSTALLATION

3.1 Installing on the frame

The fork is supplied with an threadless steer tube to be cut according to the frame size the fork is being installed on. Installing the fork on the bicycle frame is a delicate and critical operation that must be carried out by specialized personnel.

WARNING!

Suspension system installation requires specialized knowledge, tools and experience. General mechanical aptitude may not be sufficient to properly install your suspension system. Please have your suspension system installed only by an authorized Marzocchi Suspension Center. Improper installation can result in failure of your Marzocchi Suspension System, an accident, personal injury, or death.

The interference of the cylinder on the base and the play between the cylinder and frame are particularly critical factors for the safety of the operator. For this reason, maintenance and installation must be performed exclusively at authorized technical assistance centres, which have suitable equipment and specific knowledge.

NOTE

There is a protective film to be removed before use to protect the stickers.

NOTE

When installing the remote system, only use the cable housing supplied or similar housing with the same diameter. Only use derailleur housing. Do not use brake cable housing or any housing with a spiral wind under the outer coating.

3.1.1 Installation of dual crown forks on the frame

WARNING!

On all dual crown Marzocchi forks, the lower crown is clamped to the stanchions using bolts. In this case, please be aware of the following precautions during installation.

On double crown forks, the lower part of the lower crown must be positioned above the **MIN** notch and maximum 2 mm above the reference.

The distance between the inflated tire and the lower part of the lower crown, when the fork is at travel's end, must be at least 4 mm.

The length of the steer tube between the two crowns (see **Picture 2A**) must be between than the values **H min** and **H max** shown in **Table 3**.

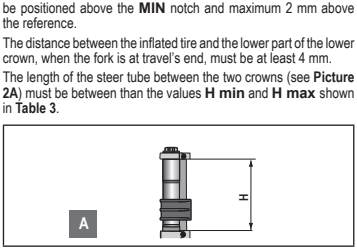

Picture 2 - *Dual crown forks installation on the frame: (2A) Steer tube length between crowns*

Model	H min	H max
380	92 mm	148 mm
888	109 mm	160 mm

Table 3 - *Steer tube length between crowns*

3.1.2 Installation of forks with carbon fibre steer tube - crown assembly on the frame

WARNING!

This is a one piece carbon steerer tube-crown assembly. Any attempt to modify, or alter this assembly may result in serious injury and/or death. To ensure safety and proper use, this product should be installed by a qualified bicycle mechanic and requires the following special care:

Visually inspect assembly before and after every ride.

No frays, nicks, cuts, cracks or wear in the carbon should be present on steerer tube crown assembly. If present, do not ride, replace assembly immediately.

Use only a 39.8mm crown race. Do not damage carbon surface when installing or removing crown race.

Cut steerer flush with stem. When cutting steerer , wrap surface with masking tape and use a fine blade (32-tooth minimum). Remove frays and burrs from cut area with fine sandpaper (400 grit minimum).

Do not use a star nut. Use only Marzocchi expansion style plug. Do not exceed 11.3 N-m (100in-lb) torque on the expansion plug bolt.

Do not exceed a 30mm stack height when installing the stem.

Do not exceed stem manufacturers torque specifications.

Stem may not have any sharp edges in contact with carbon steerer.

Stems with clamping area less than 50mm are not recommended.

WARNING!

Noncompliance with these care instructions may cause damage to the carbon crown steerer, loss of control of the bicycle, and could result in serious injury and/or death.

3.2 Installing the brake system

Installing the brake system is a delicate and critical operation that must be carried out by specialized personnel.

WARNING!

Brake system installation requires specialized knowledge, tools and experience. General mechanical aptitude may not be sufficient to properly install your brake system. Please have your brake system installed only by an authorized Marzocchi Service Center. Improper installation of a disk brake system can overstress the caliper mountings, which may cause the caliper mountings to break, resulting in loss of control of the bicycle, an accident, personal injury, or death. Be sure that the brake system installation is also performed in strict compliance with the instructions provided by the brake system manufacturer.

Use only brake systems that comply with the forks specifications, taking into consideration the contents of the summarizing tables contained in this manual.

WARNING!

Make sure, before every ride, that the brake cable of the disk brake system is correctly connected to the proper mounting (see 4B & 4C in Table 4).

WARNING!

The front brake line must be properly secured to the mounting tab provided on the lower casting arch. All cables and housings on the bicycle should never touch or rub any part of the fork during use.

WARNING!

Before installing a Post Mount braking system, check that the protection film has been removed from the brake caliper.

WARNING!

The fastening screw thread of the disk brake caliper must be screwed by at least 10 mm in the brake support of the fork monolite. Make sure that the fastening screws are not damaged and that they are tightened with a torque spanner according to the specifications of the brake system manufacturer. In any case tighten them by a max. tightening torque of 10 Nm.

BRAKE DISK SYSTEM SETTING - POST MOUNT

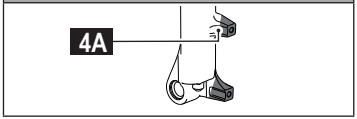

BRAKE DISK SYSTEM SHEATH SUPPORTS SETTING

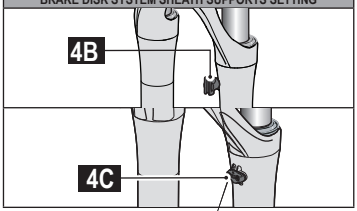

Model	Brake Disk System Setting	Max disk dimension [1]
320	Post Mount 6" (see Picture 4A / 4B)	185 mm
CORSA	Post Mount 6" (see Picture 4A / 4C)	185 mm
MARATHON	Post Mount 6" (see Picture 4A / 4C)	185 mm
44	Post Mount 6" (see Picture 4A / 4C)	203 mm
350	Post Mount 6" (see Picture 4A / 4B)	203 mm
55	Post Mount 6" (see Picture 4A / 4C)	203 mm
SLOPE CR	Post Mount 6" (see Picture 4A / 4C)	203 mm
DIRT JUMPER	Post Mount 6" (see Picture 4A / 4C)	203 mm
380	Post Mount 8" (see Picture 4A / 4B)	229 mm
888	Post Mount 8" (see Picture 4A / 4C)	229 mm

Table 4 - *Brake system setting*

[1] Installation is only possible when the specific adapter is supplied by the brake system manufacturer.

3.3 Wheel installation

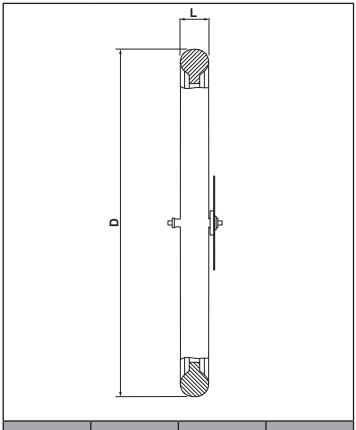

Model	Wheel Compatibility	L max	D max
320 29"	29"	65 mm	750 mm
320 27,5"	27,5"	65 mm	710 mm
CORSA	26"	60 mm	684 mm
MARATHON	26"	60 mm	684 mm
44	29"	58 mm	744 mm
350	27,5"	65 mm	724 mm
55	26"	65 mm	692 mm
SLOPE CR	26"	65 mm	692 mm
DIRT JUMPER	26"	60 mm	684 mm
380	26" / 27,5"	75 mm	712 mm
		68 mm	724 mm
888	26" / 27,5"	75 mm	712 mm
		60 mm	720 mm

Table 5 - *Maximum tire dimension*

After installation, you must verify that the distance between the inflated tire and the lower part of the lower crown is at least four (4) mm when the fork legs are fully compressed.

Before every use you must verify that:

- The tire turns freely;
- The tire does not make any contact with the arch or the brake system.

3.4 Wheel axle securing system

The wheel securing system on the fork monolite can be:

- 9mm QR,
- QR15 or QR20 quick release axle,
- ø20mm through axle.

Model	Wheel Axle	
320	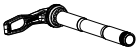	QR15
44	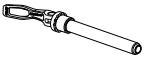	QR15
350		QR15
CORSA		9QR
MARATHON		9QR
55	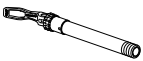	QR20
SLOPE CR		QR20
DIRT JUMPER		9QR - ø20mm
380		ø20mm
888		ø20mm

Table 6 - *Wheel securing systems*

3.4.1 - 9mm QR fork: wheel installation

CORSA	MARATHON	DIRT JUMPER

Install the wheel in compliance with the wheel manufacturer's instructions. For correct fork function after installing the wheel, you will need to:

- Check the fork-wheel alignment by fully compressing the fork a few times. The wheel should not make contact with, or come close to any portion of the fork.
- Lift the front of the bicycle, and spin the wheel a few times to verify correct alignment and spacing with the disk brake or the V-Brake brake pads. Check the owner's manual of the brake system for the proper specifications.

3.4.2 - ø20mm through axle: wheel installation

DIRT JUMPER	888

For optimum fork performance, please follow the instructions below when installing the wheel:

- Place the wheel in between each fork leg.
- Align the center of the wheel with each wheel axle clamp (see **3A** of **Picture 3**).
- Insert the axle through the wheel axle clamp on the right side, through the wheel, and through the left axle clamp (see **3A** of **Picture 3**).
- Tighten the axle to the required torque (**15±1 Nm**) using two 6 mm Allen keys to the axle caps (see **3A** of **Picture 3**).
- Check for the proper fork-wheel alignment. To do this, begin by fully compressing the fork a few times. The wheel should not make contact with, or come close to any portion of the fork. Then lift the front of the bicycle and spin the wheel a few times to verify the correct alignment with the disk brake. The wheel should not wobble from side to side or up and down. Check the owner's manual of the brake system for the proper specifications.
- On DIRT JUMPER series tighten the screw positioned on each wheel axle clamp to the required torque (**6±1 Nm**) using a 4 mm Allen key (see **3B** of **Picture 3**).
- On 888 series tighten the screws positioned on each wheel axle clamp to the required torque (**6±1 Nm**), with a "**1-2-1**" sequence, using a 4mm Allen key (see **3C** of **Picture 3**).

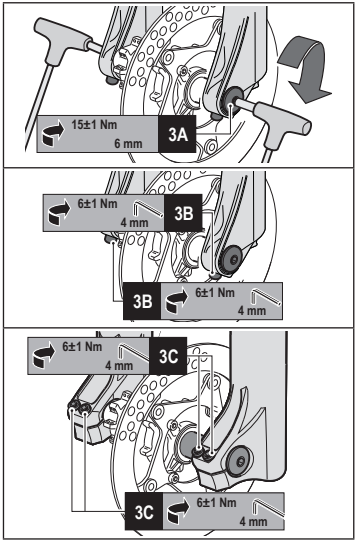

Picture 3 - *ø20mm through axle: wheel installation*

3.4.3 - ø20mm Taperwall through axle: wheel installation

380

For optimum fork performance, please follow the instructions below when installing the wheel:

- Place the wheel in between each fork leg.
- Align the center of the wheel with each wheel axle clamp (see **4A** of **Picture 4**).
- Insert the axle through the wheel axle clamp on the left side, through the wheel, and through the right axle clamp (see **4A** of **Picture 4**).
- Tighten the axle to the required torque (**15±1 Nm**) using one 6mm Allen key to axle cap (see **4B** of **Picture 4**).
- Check for the proper fork-wheel alignment. To do this, begin by fully compressing the fork a few times. The wheel should not make contact with, or come close to any portion of the fork. Then lift the front of the bicycle and spin the wheel a few times to verify the correct alignment with the disk brake. The wheel should not wobble from side to side or up and down. Check the owner's manual of the brake system for the proper specifications.
- Tighten the screws positioned on each wheel axle clamp to the required torque (**6±1 Nm**), with a "**1-2-1**" sequence, using a 4mm Allen key (see **4C** of **Picture 4**).

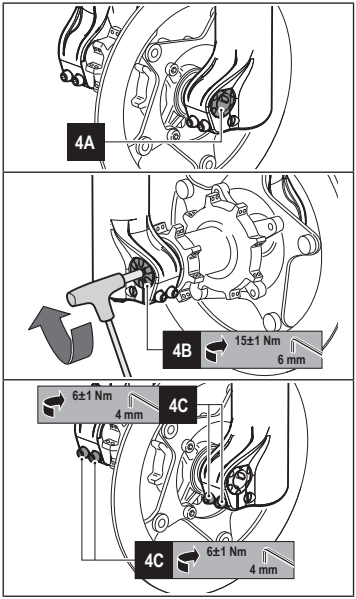

Picture 4 - *ø20mm Taperwall through axle: wheel installation*

3.4.4 - QR15 or QR20 quick release axle - wheel installation

320	350
44	55
SLOPE CR	

WARNING!

Always check the cleanness of the fork dropouts and remove the possible dirt and mud before installing the wheel. Dirt can compromise the correct functioning of the axle and the fastening safety. An incorrect wheelfastening can cause serious accidents, even fatal ones. Do not tighten the axle without having put the hub between the fork dropouts first. Do not ever use other tools during the tightening of the wheel axle. An excessive tightening can damage the axle and the fork.

The QR15 and QR20 axle systems allow a quick assembling and disassembling of the front wheel, without the use of tools.

The wheel locking procedure is as simple as the locking of a 9mm QR with an eccentric lever. The installation procedure is very similar as well.

For optimum fork performance, please follow the instructions below when installing the wheel:

- Place the wheel hub between the two fork dropouts.
- Align the wheel hub on the fork dropouts (see **5A** of **Picture 5**).
- Install the axle through the right wheel axle dropout. (see **5A** of **Picture 5**).
- Pass through the hole in the centre of the hub until it stops against the left wheel axle dropout.
- Rotate the axle clockwise until resistance to the screwing is perceived (see **5B** of Picture **5**).

On all QR20 wheel axles and QR15 of 320 and 350 series keep the lever fully opened to screw and unscrew the axle.

On QR15 axle of 44 series hold the axle bolt (on the left side) with the second hand while screwing or unscrewing the axle.

During the screwing operation, do not use the QR axle lever to increase the tightening torque.

- Position the lever in the preferred direction then close it to lock the axle (see **5C** of **Picture 5**).

The lever must cause resistance during the rotation of the closing in order to have correct fastening strength and tightness. When the closing is finished, a slight depression of the lever can be noticed on the hand.

Open the quick release lever in order to increase tension and screw further on the axle, rotating clockwise, until the correct tension during the closing is felt and seen on the hand.

If the lever does not manage to rotate completely to the closed position, it means that the axle has been screwed into the fork dropout too much. In this case tension must be reduced, to do this screw the axle slightly, rotating it anticlockwise, until the correct tension during the lever's closing is felt and seen on the hand.

- Check that the release lever is in a position that assures the correct fastening of the axle, and that it is in a position that it is not subject to collisions during the use (see **5C** of **Picture 5**).
- Check for the proper fork-wheel alignment. To do this, begin by fully compressing the fork a few times. The wheel should not make contact with, or come close to any portion of the fork. Then lift the front of the bicycle and spin the wheel a few times to verify the correct alignment with the disk brake. The wheel should not wobble from side to side or up and down. Check the owner's manual of the brake system for the proper specifications.

Do not rotate or change the lever position after having closed the quick release lever. The shift of the fastening lever can compromise the wheel fastening safety causing the axle to loosen.

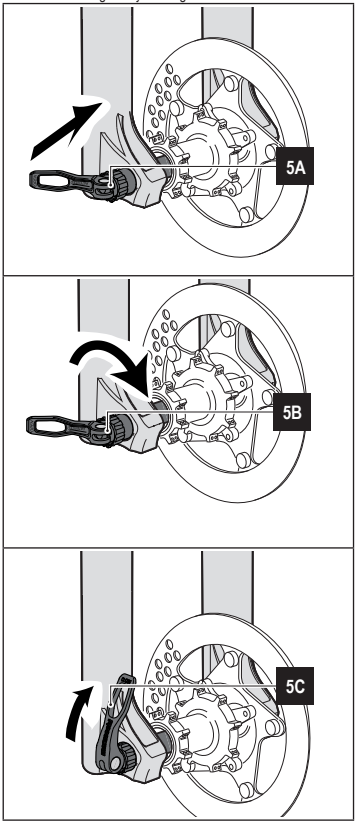

Picture 5 - *QR15 or QR20 quick release axle - wheel installation*

4. SUMMARIZING TABLES

NOTE

Air pressure values will vary depending on the rider, terrain, preferred travel position and personal preferences. Therefore the data provided by this chart are purely indicative and have to be considered as a quick set-up guide for your first settings and may vary after riding the bicycle. Use a pump (Code: R4209/P) for calibration. In forks with mechanical spring preload, it is advisable to adjust the mechanical preload before increasing the working pressure. On air forks, lower preassures than those recommended might reduce the fork free length declared.

NOTE

Click on www.marzocchi.com Technical Area if you need to know the list of alternative springs, upgrade kit and travel change kit.

NOTE

In some forks you can change the fork travel with specific spacers which can be installed on fork, supplied in the box or sold separately.

WARNING!

The installation of the travel change kit, upgrade kit and springs kit must be performed by a Marzocchi Authorized Service Centre.

Air fork	Adjustment side	Air pressure - Rider's weight					
		55 ÷ 65 Kg 121 ÷ 143 lbs	65 ÷ 85 Kg 143 ÷ 187 lbs	85 ÷ 105 Kg 187 ÷ 232 lbs	55 ÷ 65 Kg 121 ÷ 143 lbs	65 ÷ 85 Kg 143 ÷ 187 lbs	85 ÷ 105 Kg 187 ÷ 232 lbs
		bar			psi		
320 LCR CARBON	RH	4,0 ÷ 5,0	5,0 ÷ 6,0	6,0 ÷ 7,5	60 ÷ 70	70 ÷ 85	85 ÷ 110
320 LCR	RH	4,0 ÷ 5,0	5,0 ÷ 6,0	6,0 ÷ 7,5	60 ÷ 70	70 ÷ 85	85 ÷ 110
320 LR	LH	4,0 ÷ 5,0	5,0 ÷ 6,0	6,0 ÷ 7,5	60 ÷ 70	70 ÷ 85	85 ÷ 110
CORSA LR	LH	4,0 ÷ 5,0	5,0 ÷ 6,0	6,0 ÷ 7,5	60 ÷ 70	70 ÷ 85	85 ÷ 110
MARATHON LR	LH	4,0 ÷ 5,0	5,0 ÷ 6,0	6,0 ÷ 7,5	60 ÷ 70	70 ÷ 85	85 ÷ 110
350 NCR	RH	5,0	6,0	7,0	70	85	100
350 CR	LH	5,0	6,0	7,0	70	85	100
44 MICRO STA	RH	7,0	8,0	9,0	100	115	130
55 CR	LH	5,0	6,0	7,0	70	85	100
SLOPE CR	LH	6,0	7,0	8,0	85	100	115

Spring fork	Adjustment side	Air pressure - Rider's weight					
		55 ÷ 65 Kg 121 ÷ 143 lbs	65 ÷ 85 Kg 143 ÷ 187 lbs	85 ÷ 105 Kg 187 ÷ 232 lbs	55 ÷ 65 Kg 121 ÷ 143 lbs	65 ÷ 85 Kg 143 ÷ 187 lbs	85 ÷ 105 Kg 187 ÷ 232 lbs
		bar			psi		
350 NCR TITANIUM	RH	1,0	1,5	2,0	15	22	30
350 R	LH	1,0	1,5	2,0	15	22	30
55 R	LH	1,0	1,5	2,0	15	22	30
DIRT JUMPER 1	RH	0	0,5	1,0	0	7	15
DIRT JUMPER 2	RH	0	0,5	1,0	0	7	15

Table 7 - *Recommended air pressure values*

WARNING!

The operations listed below accompanied by this symbol should only be performed by authorized MARZOCCHI service centers.

General maintenance operation	Use	
	Intense	Normal
Check that screws are tightened to required torque	Before every ride	
Stanchions cleaning	After every ride	
Air pressure control	Before every ride	10 hours
Cleaning and lubrication of sealing rings	Before every ride	Every two ride
Oil seals control	25 hours	50 hours
Oil change	50 hours	100 hours
Cartridge oil replacement	25 hours	50 hours
Fork oil seals cartridge replacement	50 hours	100 hours

Table 8 - *Periodic maintenance table*

Part to be tightened	Tightening torque (Nm)
Fork's top caps	25 ± 1
Adjuster locking screws	2 ± 0,5
Pumping rod / cartridge foot nuts	10 ± 1
Pumping rod foot screws	10 ± 1
Lower crown fixing screws (380 - 888)	6 ± 1
Lower crown fixing screws (380 - 888)	6 ± 1
Wheel axle screws	15 ± 1
Allen screws for wheel axles	6 ± 1

Table 9 - *Tightening torques*

5 WARRANTY

5.1 Warranty For EU Countries

Subject to the terms and conditions set forth herein, Tenneco Marzocchi S.r.l. grants an independent warranty to the relevant end-user that its suspension system is free from defect in material and/or workmanship throughout a period of two (2) years from the date of the purchase. A defective suspension system will be repaired or replaced, at the option of Tenneco Marzocchi S.r.l. free of charge, within thirty (30) days after receipt of the same from the relevant authorized Tenneco Marzocchi dealer. The retail invoice or, if any, the warranty certificate dated and stamped by the relevant Marzocchi retailer, enclosed with the product, will serve to prove the commencement date of the warranty and the place of purchase of the product. In the event of a defect within the aforesaid term, the purchaser should return the product to the Marzocchi retailer where he/she bought it, illustrating the defect and the reasons of the warranty claim. The retailer will inform the purchaser when the product has been repaired or replaced.

5.1.1.1 NOT COVERED: This warranty does not cover defects resulting from accidents, alteration, neglect, misuse, abuse, improper use, improper assembly, improper maintenance, repairs improperly performed, replacement parts or accessories not conforming to Tenneco Marzocchi S.r.l.'s specifications, modifications not recommended or approved in writing by Tenneco Marzocchi S.r.l. activities such as acrobatics, stunt jumping, ramp riding, racing, commercial use, competitive use, use in mountain biking or BMX parks, use on BMX trails, and/or normal wear or deterioration occasioned by the use of the suspension system, and, in general, all subsequent non- conformity defects resulting from the non observance of the instructions of the products Manual.

This warranty does not cover, as they are not original non-conformities, items and substances subject to normal wear occasioned by use, such as oil, sealing rings, dust seals, and sliding bushes. In addition, this warranty is void in the event that the suspension system is used with rental bicycles. This warranty will be automatically void if the serial number of the Marzocchi suspension system is altered, erased, defaced or otherwise subject to any tampering. Finally, this warranty will not cover second-hand Marzocchi suspension systems and in this case the retailer will offer a warranty for the second-hand product, without liability of any kind, either direct or indirect, of Tenneco Marzocchi S.r.l.

5.1.1.2 TERRITORIAL LIMITATION: This warranty covers all the products bought only in a EU country (including Switzerland), except for products bought in a EU country but used in the USA which the clauses of the "Warranty rest of the world – USA included" apply to. Some EU countries set mandatory rules which govern the warranty for consumer goods; should these rules be inconsistent with the terms of this warranty, national mandatory rules shall take precedence.

WARNING!

Install, service and use the Marzocchi Suspension System in absolute compliance with the instructions in the products Manual.

5.1.2 PURCHASER: This warranty is made by Tenneco Marzocchi S.r.l. with only the original purchaser of the Marzocchi suspension system, and does not extend to any third parties. The rights of the original purchaser under this warranty may not be assigned.

5.1.3 TERM: The term of this warranty shall commence on the date of purchase and shall continue for a period of two (2) years from the date of the original purchase. Unless the two-year warranty still applies, replaced parts have an additional six (6) month warranty.

5.1.4 PROCEDURE: In the event of a defect covered by this warranty, the purchaser should exclusively contact the authorized Tenneco Marzocchi dealer, from whom the purchaser bought the product (or Tenneco Marzocchi USA).

5.1.5 ADDITIONAL REMEDIES: The warranty granted hereunder shall be respective of and in addition to any statutory warranty claim an end-user may have against its relevant dealer where the end-user has purchased the suspension system or any mandatory product liability rights.

5.1.6 DAMAGES: Except for the case of wilful acts or gross negligence by Tenneco Marzocchi S.r.l., this independent warranty shall not give any rights for compensation of damages but shall be limited to the remedies set forth in Section 5.1 above. Specifically, Tenneco Marzocchi S.r.l. and Tenneco Marzocchi USA, Inc. SHALL NOT BE RESPONSIBLE UNDER THIS WARRANTY FOR ANY INDIRECT, INCIDENTAL OR CONSEQUENTIAL DAMAGES ASSOCIATED WITH THE USE OF THE MARZOCCHI SUSPENSION SYSTEM.

5.1.7 WARNING: Always install, repair and use your Marzocchi suspension system in strict compliance with its owner's manual.

5.1.8 EUROPEAN WARRANTY APPLICABLE LAW: Any disputes arising out of this warranty will be governed by the laws of the country of Italy , including Italian Consumer Code.

5.2 Warranty rest of the world excluding Europe – USA included
If any component of your suspension system is found to be defective in materials or workmanship within the term of this Limited Two Year Warranty (the "Agreement"), the defective component will be repaired or replaced, at the option of Tenneco Marzocchi S.r.l. free of charge, within thirty (30) days after receipt of the same from an authorized Tenneco Marzocchi dealer or Tenneco Marzocchi USA, freight prepaid, together with the original retail invoice or other evidence of the date of purchase.

5.2.1 NOT COVERED: This warranty does not cover damage resulting from accidents, alteration, neglect, misuse, abuse, improper use, lack of reasonable or proper maintenance, improper assembly, repairs improperly performed, replacement parts or accessories not conforming to Tenneco Marzocchi S.r.l.'s specifications in the Owner's Manual or on the Website www.marzocchi.com, modifications not recommended or approved in writing by Tenneco Marzocchi S.r.l. activities such as acrobatics, jumping, stunt riding, ramp riding, racing, commercial use, competitive use, use in mountain biking or BMX parks, use on BMX trails, and/or normal wear or deterioration occasioned by the use of the suspension system. This warranty does not cover items subject to normal wear due to the use of the suspension system, such as for example oil, oil seals, dust seals and bushes. We therefore ask you to check (or have your dealer check) its condition at the moment you purchase the suspension system, as that is the only time that it will be possible to replace such components. In addition, this warranty is void in the event that the suspension system is used with rental bicycles, unless Tenneco Marzocchi S.r.l. provided prior approval in writing for such use. This warranty also does not include any expenses related to the transportation of the Marzocchi suspension system to or from an authorized Tenneco Marzocchi dealer (or Tenneco Marzocchi USA), labor costs to remove the Marzocchi suspension system from the bicycle, or compensation for loss of use while the Marzocchi suspension system is being repaired. This warranty will be automatically void if the serial number of the Marzocchi suspension system is altered, erased, defaced or otherwise subject to any tampering. This warranty will be automatically void if the purchaser does not follow all the instructions in the Owner's Manual and in the website www.marzocchi.com.

⚠ WARNING!

Install, service and use the Marzocchi Suspension System in absolute compliance with the instructions in the products Manual.

5.2.2 PURCHASER: This warranty is made by Tenneco Marzocchi S.r.l. with only the original purchaser of the Marzocchi suspension system, and does not extend to any third parties. The rights of the original purchaser under this warranty may not be assigned.

5.2.3 TERM: The term of this warranty shall commence on the date of purchase and shall continue for a period of two (2) years from the date of the original purchase. Unless the two-year warranty still applies, replaced parts have an additional six (6) month warranty.

5.2.4 PROCEDURE: In the event of a defect covered by this warranty, the purchaser should contact an authorized Tenneco Marzocchi dealer (or Tenneco Marzocchi USA).

5.2.5 ENTIRE AGREEMENT: This warranty supersedes any and all oral or express warranties, statements or undertakings that may previously have been made, and contains the entire agreement between the parties with respect to the warranty of this Marzocchi suspension system. Any and all warranties not contained in this warranty are expressly and specifically excluded.

5.2.6 LIMITED WARRANTY: Except as expressly provided by this warranty, Tenneco Marzocchi S.r.l. and Tenneco Marzocchi USA, Inc. SHALL NOT BE RESPONSIBLE FOR ANY INCIDENTAL OR CONSEQUENTIAL DAMAGES ASSOCIATED WITH THE USE OF THE MARZOCCHI SUSPENSION SYSTEM OR A CLAIM UNDER THIS AGREEMENT, WHETHER THE CLAIM IS BASED ON CONTRACT, TORT OR OTHERWISE. The foregoing statements of warranty are exclusive and lieu of all other remedies. Some states do not allow the exclusion or limitation of incidental or consequential damages, so this limitation or exclusion may not apply to you.

5.2.7 DISCLAIMER: ANY IMPLIED WARRANTY OF MERCHANTABILITY OR FITNESS FOR A PARTICULAR PURPOSE AND ALL IMPLIED WARRANTIES ARISING FROM A COURSE OF DEALING, USAGE OR TRADE, BY STATUTE OR OTHERWISE, IS HEREBY STRICTLY LIMITED TO THE TERM OF THIS WRITTEN WARRANTY. This Agreement shall be the sole and exclusive remedy available to the Purchaser with respect to this purchase. In the event of any alleged breach of any warranty or any legal action brought by the purchaser based on alleged negligence or other tortuous conduct by Tenneco Marzocchi S.r.l. the Purchaser's sole and exclusive remedy will be repair or replacement of the defective materials, as stated above. No dealer and no other agent or employee of Tenneco Marzocchi S.r.l. is authorized to modify, extend or enlarge this warranty. This warranty expressly supersedes all representations set forth in Tenneco-Marzocchi's or any other entities product literature and marketing materials, and including but not limited to any advertising literature and Technical Specifications.

5.2.8 WARNING: Always install, repair and use your Marzocchi suspension system in strict compliance with its owner's manual.

5.2.9 OTHER RIGHTS: This warranty gives you specific legal rights, and you may also have rights that may vary from state-to-state.

5.2.10 APPLICABLE LAW IN THE REST OF THE WORLD: This agreement shall be deemed to have been negotiated and entered into in Bologna, Italy. Any and all claims or disputes arising out of or otherwise relating to this warranty shall be governed and construed in accordance with the laws of the State of New York, and the parties expressly acknowledge and irrevocably agree that the sole and exclusive venue for and jurisdiction over any such matter shall be the courts of Bologna, Italy to the exclusion of the courts of any other place.

11 - 2014 - Ed. 00.00

www.marzocchi.com

TENNECO