LIVE IT UP.

marzocchi
SUSPENSION PRODUCTS

2013

Italian design since 1949

marzocchi
SUSPENSION PRODUCTS

Where To Find Us & Our Athletes

Wherever there are freeriders in the world, you'll find Marzocchi Suspension. Our name hasbecome inseparable with the very spirit of gravity mountain biking – after all, it's in our blood.

LIVE IT UP

Offices
Athletes
Events
Tradeshows
Distributors &
Service Centers

marzocchi
SUSPENSION PRODUCTS

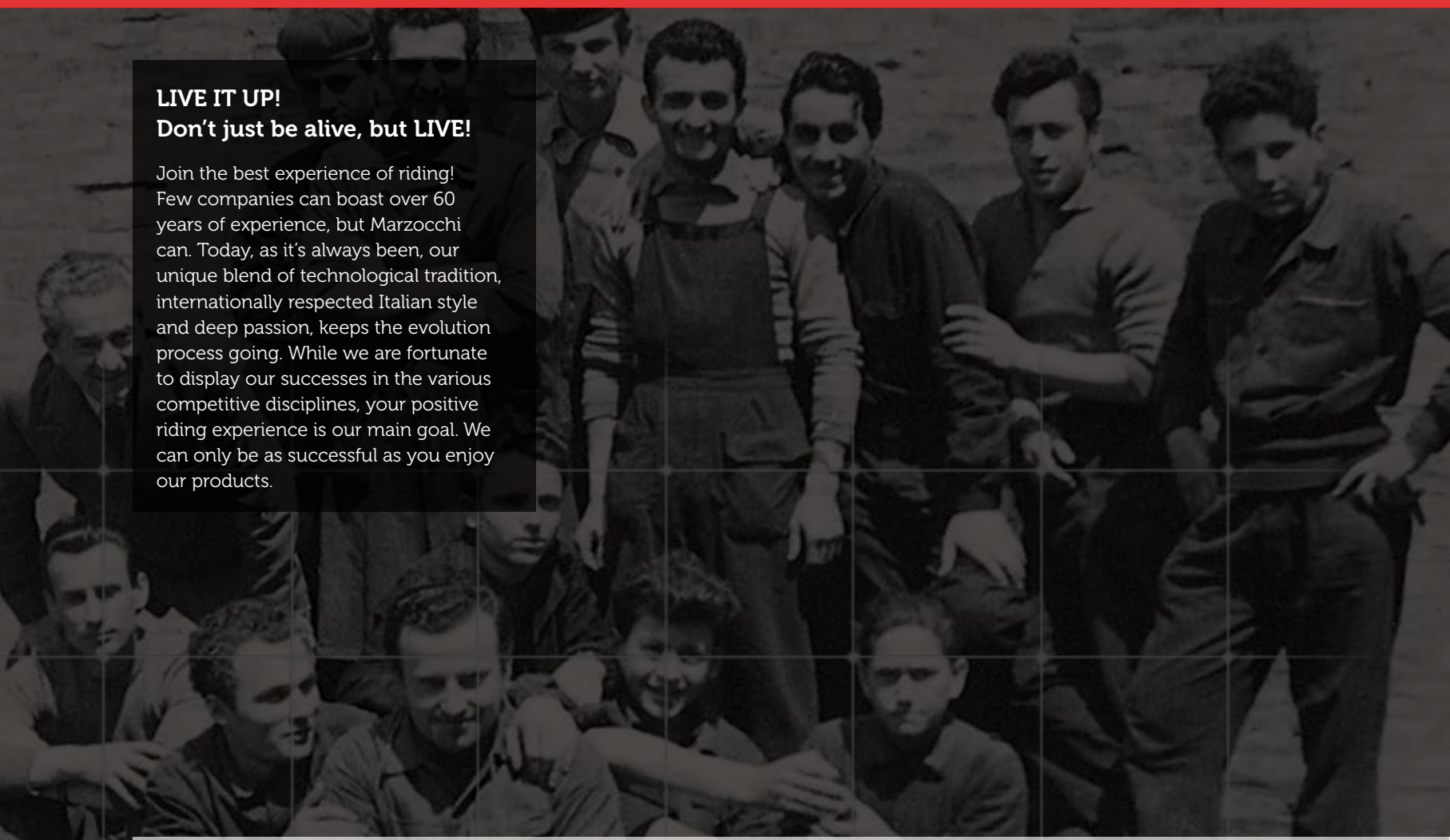

LIVE IT UP!
Don't just be alive, but LIVE!

Join the best experience of riding! Few companies can boast over 60 years of experience, but Marzocchi can. Today, as it's always been, our unique blend of technological tradition, internationally respected Italian style and deep passion, keeps the evolution process going. While we are fortunate to display our successes in the various competitive disciplines, your positive riding experience is our main goal. We can only be as successful as you enjoy our products.

Founded in 1949 by the two brothers Stefano e Guglielmo Marzocchi, the company has been leading for more than 60 years in the field of projecting and producing forks and shocks.

At the end of the fifties, Marzocchi began to be recognized as one of the most important suppliers for those eminent motorcycle brands as Ducati, Mondial and Benelli. Now, as in the past, Marzocchi's products are aknowledged worldwide as the better built and more efficient.

At the end of the eighties, mountain bike field experienced a great growth and Marzocchi decided to enter with great determination into this new sector. Consumers began to ask for cushioned forks for their bikes. In response to such requirement, in 1989 Marzocchi introduced the first prototype of a cushioned fork. The market grew together with Marzocchi and in 1995 the renowned "Bomber" fork came out.

Starting from September 1st 2008, Marzocchi's suspension division is part of Tenneco, a US industrial group operating globally, with many sites and thousands employees worldwide. The competencies coming from the two companies merged up, giving birth to the Tenneco Marzocchi S.r.l.

Nowadays the company is experiencing a constant growing process, and dealing with the new challenges with the same old determination, beeing inspired by a goal: improving the quality of its products and its service.

Arriving far requires many efforts and struggles, but you are not supposed to stop once you have innovative projects and new ideas, instead, you have to stand for the challenge. For us, that means trying to reach superior perfomances which should be within the grasp of all the people using our products. Because our best performance is your emotion.

Teams

Ms Mondraker Team
Markus Pekoll, Damien Spagnolo, Brooke Mcdonald, Emmeline Ragot

Chain Reaction Cycles
Alex Bond, Lewis Buchanan, Matti Lehikoinen, Matthew Simmonds, Joseph Smith

Rocky Mountain Freeride Team
Wade Simmons, Geoff Gulevich, Jarrett Moore

Massi DH Team
Ivan Oluego, Bernart Guardia

UMF Team
Thomas Genon, Alfred Scholtze, Clemens Kaudela, Tanja Hendrysiak, Hannes Klausner, Alban Aubert, Dominik Raab, Hannes Klausner

Polygon Factory Team
Dadi Nurcahyadi, Chandra Rafsanzani, Bandi Sugito, Hildan Afos Katana, Agung Fambudi, Yavento Ditra Pranata, Kusmawati Yazid

Black Arrows
Lorenzo Suding, Oscar Härnström

Follow My Dream
Thanée Seagrave

Transbiking
Damien Oton, Brice Epally, Laurent Brossard

GT Skoda Chamonix
Cedric Ravanel, Cécile Ravanel, Fabien Canal, Julien Trarieux, Lene Byberg, Julie Berteaux, Fanny Bourdon

Surfing Shop Torpado
Andrea Tiberi, Yader Zoli, SerenaCalvetti, Daniela Veronesi, Marco Bui, Marco Milivinti, Carlo Gambirasio, Alia Marcellini, Claudio Barreca

L'Arcobaleno Carraro Team
Martino Fruet, Pippo Lamastra, Marco Bianco, Daniela Campuzano, Evelyn Staffler, Igor Smarzano, Barbara Oberdorfer,Ilenia Lazzaro, Alessandra Bianchetta

Team Protek
Dimitrios Antoniadis, Dmitri Medveden, Ivan Smirnov, Ekateryna Anoshina, Periklis Ilias, Andreas Fuchs, Robi Sujevic, Vera Andreeva

Scott Generation Team
Daniela Storch, Florian Schoen, Lutz Baumgaertel, Alexander Stark, Patrik Mueller, Torsten Muetzliz, David Voll

Ready2Ride
Andrea Bruno

marzocchi
SUSPENSION PRODUCTS

Overview MY13 /// FORKS

INTENDED USE	MODEL 2013	NEW FOR 2013	TRAVEL mm	WEIGHT grams	DAMPING
CROSS COUNTRY	CORSA SUPERLEGGERA LR	GOLD RACE COATING	100 (120 or 80 with spacers)	1610g	LR
CROSS COUNTRY	CORSA SUPERLEGGERA 29" CARBON Remote Control	TST MICRO UPGRADE: IMPROVED DAMPING CURVE	100 (120 or 80 with spacers)	1708g QR15 axle incl.	TST MICRO (W/ Remote Control)
CROSS COUNTRY	CORSA SUPERLEGGERA 29" Aluminum Hollow Crown Remote Control			1858g QR15 axle incl.	
TRAIL	44 MICRO Switch TA 29"	TST MICRO UPGRADE: IMPROVED DAMPING CURVE SWITCH TA	140 -> 110	2090g QR15 axle incl.	TST MICRO
ENDURO	55 RC3 EVO V.2 Titanium Tapered Steerer	RC3 EVO V.2	170	2448g QR20 axle incl.	RC3 EVO V.2
ENDURO	55 RC3 EVO V.2 Titanium			2470g QR20 axle incl.	
ENDURO	55 MICRO Switch TA Tapered Steerer	TST MICRO UPGRADE: IMPROVED DAMPING CURVE	160 -> 120	2308g QR20 axle incl.	TST MICRO
ENDURO	55 MICRO Switch TA			2330g QR20 axle incl.	
ENDURO	55 CR	GOLD RACE COATING	170 (150 with spacer)	2280g QR20 axle incl.	CR
ENDURO	55 R		160	2536g QR20 axle incl.	R
FREERIDE / DOWNHILL	888 RC3 EVO V.2 Titanium Ti Bolts!	GOLD RACE COATING	200	3029g 20mm axle incl.	RC3 EVO V.2
FREERIDE / DOWNHILL	888 RC3 EVO V.2			3310g 20mm axle incl.	
FREERIDE / DOWNHILL	888 CR			3520g 20mm axle incl.	CR
DIRT JUMPING	DIRT JUMPER 1 Tapered Steerer	TAPERED STEERER	100	2275g 20mm axle incl.	RV
DIRT JUMPING	DIRT JUMPER 1			2297g 20mm axle incl.	
DIRT JUMPING	DIRT JUMPER 3			2730g steel steerer	FIX R

LIVE IT UP

SPRING	CASTING & STANCHIONS		STEERER	BRAKE SYSTEM	
	AXLE	STANCHIONS		V-BRAKE	D-BRAKE
AER	9MM QR	Ø32 MM ALUMINUM GOLD RACE COATING	ALUMINUM 1-1/8"	NO	6" POST MOUNT max disc 185mm
AER	29" QR15	Ø32 MM ALUMINUM NICKEL TREATMENT	CARBON FIBER CROWN & TAPERED STEERER	NO	6" POST MOUNT max disc 185mm
			TAPERED ALUMINUM 1,5" -> 1-1/8"		
SWITCH TA		Ø32 MM ALUMINUM NICKEL TREATMENT	TAPERED ALUMINUM		6" POST MOUNT max disc 203mm
TITANIUM	QR20	Ø35 MM ALUMINUM NICKEL TREATMENT	TAPERED ALUMINUM	NO	6" POST MOUNT max disc 203mm
SWITCH TA			ALUMINUM 1-1/8"		
			TAPERED ALUMINUM		
			ALUMINUM 1-1/8"		
AER		Ø35 MM ALUMINUM GOLD RACE COATING	ALUMINUM 1-1/8"		
COIL					
TITANIUM k=5.4N/mm	20MM	Ø38 MM ALUMINUM NICKEL TREATMENT	ALUMINUM 1-1/8"	NO	8" POST MOUNT max disc 230mm
COIL		Ø38 MM ALUMINUM GOLD RACE COATING			
COIL	20MM	Ø32 MM ALUMINUM BLACK ANODIZED	TAPERED ALUMINUM 1,5"->1-1/8"	NO	6" POST MOUNT max disc 203mm
			ALUMINUM 1-1/8"		
	9MM QR	Ø32 MM STEEL CHROME	STEEL 1-1/8		

marzocchi
SUSPENSION PRODUCTS

Overview MY13 /// ROCO REAR SHOCKS

MODEL 2013	LENGTH mm	SPECIFICATIONS FEATURES	HARDWARE	WEIGHT
ROCO RC World Cup Coil w/ Piggyback	267x89 241x76 222x70	HIGH SPEED COMPRESSION REBOUND BOTTOM-OUT RESISTANCE VIA AIR VALVE SPRING PRELOAD	2 PCS KIT 22x8	815g spring incl.
ROCO TST R Coil w/ Piggyback	215,5x63,5 200x57	TST TRAIL SELECTION TECHNOLOGY REBOUND BOTTOM-OUT RESISTANCE VIA AIR VALVE SPRING PRELOAD	2 PCS KIT 22x8	815g spring incl.
ROCO AIR RC WORLD CUP Air w/ Piggyback	241x76 222x70	HIGH SPEED COMPRESSION - REBOUND BOTTOM-OUT RESISTANCE VIA AIR VALVE ADJUSTABLE AIR SPRING - HIGH VOLUME LINEAR AIR SPRING NICKEL COATED AIR CANISTER CARBON FIBER LAYER AROUND EXTERNAL AIR CHAMBER	2 PCS KIT 22x8	455g
ROCO AIR TST R Air w/ Piggyback	215,5x63,5 200x57	TST TRAIL SELECTION TECHNOLOGY - REBOUND BOTTOM-OUT RESISTANCE VIA AIR VALVE ADJUSTABLE AIR SPRING - HIGH VOLUME LINEAR AIR SPRING NICKEL COATED AIR CANISTER CARBON FIBER LAYER AROUND EXTERNAL AIR CHAMBER	2 PCS KIT 22x8	455g
ROCO LO Air in-line	215,5x63,5 200x57	LOCK OUT - REBOUND ADJUSTABLE AIR SPRING - HIGH VOLUME LINEAR AIR SPRING NICKEL COATED AIR CANISTER CARBON FIBER LAYER AROUND EXTERNAL AIR CHAMBER	2 PCS KIT 22x8	255g
ROCO LITE Air in-line	190,5x50 165,1x38,1	*LOCK OUT - REBOUND* *GOLD RACE COATING ON AIR CANISTER AND MAIN TUBE* *Light weight for pure XC intended use*	2 PCS KIT 22x8	198g

/// REAR AXLES

	LENGTH mm	WEIGHT grams
QR12 REAR AXLE	135X12	74 g
	142X12	76 g
	150X12	78 g

LIVE IT UP

Cartridges

DYNAMIC BLEED CARTRIDGE: LR- CR- R

One concept – three versions.
Drawing from our experience in Motocross forks, no one else offers this kind of technology for a mountain bike: reliable, durable, virtually indestructible and yet with the buttery smoothness you have come to expect of a Marzocchi fork.
Combining the damping feeling and the reliability of the open bath cartridge with the lightweight of a closed cartridge – impossible? Not for our engineers. Thanks to the compensation port any excess oil will flow out into the lowers keeping bushings and wipers lubricated. The oil volume always remains constant at an optimum since the previously expelled oil is brought back inside.

LR (lockout and rebound)

CR (compression and rebound with interchangeable compression shims)

R (rebound)

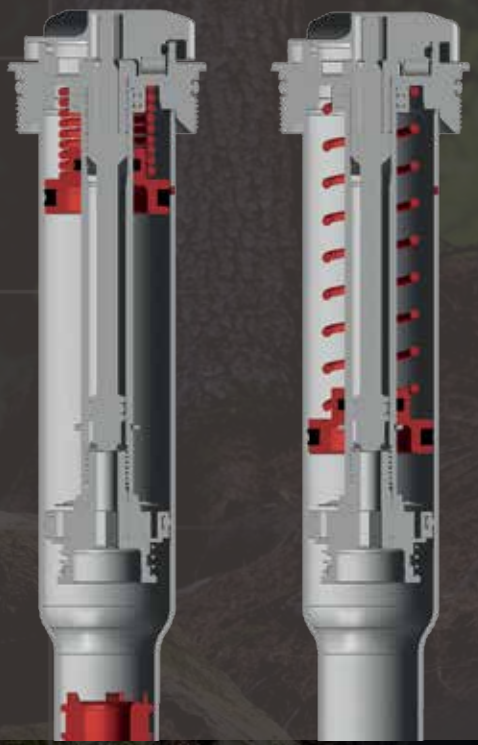

NEW for MY 13

restyled Rebound Valve unit: new hydraulic setting with improved oil circuits
new low friction seals new CNC knob with more sensitive clicks.

TST MICRO

To ensure a fork's ideal performance, it is key to keep oil and air completely separate. We were the first to introduce a bladder system on a mountain bike cartridge; a design taken from motocross technology. The bladder can inflate to expand when the shaft goes inside without any air getting in. Slightly redesigned to reach perfection, the TST Micro is the latest step in a forward evolution of our closed cartridge hydraulic system. The red knob on the lower part of the fork leg adjusts rebound; the black top lever activates the Micro system controlling compression. The Micro adjustment located in the middle of the top left knob sets the threshold valve in order to offer maximum traction and control on any terrain and combining it with any riding style. Lockout is activated quick and easy to not hold you back from your uphill adventure.

VOLUME ADJUST

Tuning the preload, rebound and compression is not always enough. Some riders want to control the compression curve from the beginning to the end of the stroke. What they need is our exclusive Volume Adjust; the easiest way to control the second half of the compression keeping maximum control in all riding conditions without sacrificing any of the legendary plushness. All it takes is theturn of a knob and without the need of changing the oil level.

AER

Air that makes you fly. The AER system performs better than any other system on the market. Countless reviews and tests agree with us! The low pressure required keeps the seals sliding smoothly on the surface with no friction at all. A negative spring offers plushness you would expect from a coil right from the beginning of the travel. Furthermore, the fixed piston in the closed cartridge helps to reduce weight since less oil is needed in the entire system.

TRAVEL ADJUST

Derived from the tried and tested AER concept, the revolutionary hydraulic travel adjust system Switch TA is available for the 55 series (40mm) and 44 series (30mm).

marzocchi
SUSPENSION PRODUCTS

Highlights

GOLD RACE COATING

Gold Marzocchi Race Coating. Hard anodized, low friction race coating with teflon impregnation increases small bump sensitivity and overall durability of all sliding parts (stanchion surface, seals, bushings).

888 DIRECT MOUNT UPPER CROWN

Our DH flagship comes with a 4-bolts upper crown for direct mount on the bike and eliminates the need for a customized stem.

MATCHING CROWN

In selected models we offer the option of matching the colors of the lower legs and crown.

REMOTE LOCKOUT

Ergonomic, lightweight and fast :
the remote control allows to lock the fork compression control for a more efficient climb and a precise steering. As soon as the terrain gets rough a small click on the top lever and you can enjoy the full travel and the famous Marzocchi plush riding to fly over the rocks. Easy to assemble, the new lever is compatible with most regular shifters and levers on the market.

ROCO LITE

These XC rear shocks come with rebound adjustment and a lockout option. Superior performance in only 198g.

BLACK ROCO

Proven concept: our rear shock now comes in black.

TWENTY NINE INCH BACK IN 2000..

Mountain bike legend Gary Fisher and Marzocchi engineers worked on our very first 29" fork. Fast forward to 2011 and we can see that the mountain bike world is finally catching up to that decade old vision we had with Gary... the 29" bike rocks! Starting from the end of MY12, Marzocchi has developed an all-new 29" fork: the CORSA Superleggera 29". 100% optimized for the big wheel, this fork is super lightweight with a carbon fiber crown and steer tube and fits wider tires than any of its competitors. Many other designs are simply extensions of the 26" fork chassis but we took it a step further and developed a fork that is dedicated to the performance requirements the big wheel demands!

CARBON CROWN & TUBE

Monocoque carbon crown and 1.5 - 1 1/8" tapered steer tube on the top of the line 29" Corsa Superleggera RC offers the perfect compromise between weight and stability.

HOLLOW CROWN

To save a few more grams, Corsa Superleggera 29" comes with a hollow aluminum crown.

29" CHASSIS

The casting has been tried and proven especially for the requirements of a 29" wheel. A customized brake arch design and QR15 axle provide extra stiffness. Super lightweight starting at 1650g.

marzocchi
SUSPENSION PRODUCTS

Forks/// CROSS COUNTRY
CORSA SUPERLEGGERA 29"

NEW FOR 2013	TST MICRO UPGRADE: IMPROVED DAMPING CURVE	TST MICRO UPGRADE: IMPROVED DAMPING CURVE
MODEL 2013	**CORSA SUPERLEGGERA 29" CARBON** Remote Control	**CORSA SUPERLEGGERA 29"** Aluminum Hollow Crown - Remote Control
TRAVEL	100 (120 or 80 with spacers)	100 (120 or 80 with spacers)
DAMPING	> TST MICRO w/ REMOTE CONTROL > Lock Out + Micro Adjust Compression > Rebound	> TST MICRO w/ REMOTE CONTROL > Lock Out + Micro Adjust Compression > Rebound
SPRING	AER Air + Negative Spring	AER Air + Negative Spring
AXLE	29" QR15	29" QR15
STANCHIONS	Ø32MM ALUMINUM NICKEL TREATMENT	Ø32MM ALUMINUM NICKEL TREATMENT
STEERER	CARBON FIBER CROWN & TAPERED STEERER	TAPERED ALUMINUM 1,5"->1-1/8"
BRAKE SYSTEM	6" POST MOUNT max disc 185mm	6" POST MOUNT max disc 185mm
WEIGHT	1708g QR15 axle incl.	1858g QR15 axle incl.
COLOR	PURE WHITE + CARBON FIBER CROWN & STEERER	PURE WHITE MATCHING CROWN

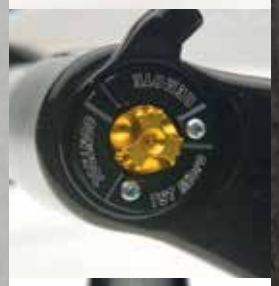

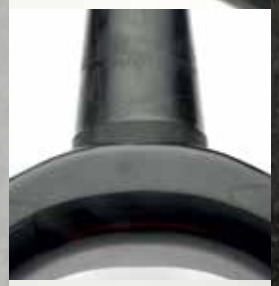

Forks/// CROSS COUNTRY

CORSA SUPERLEGGERA

NEW FOR 2013	GOLD RACE COATING
MODEL 2013	CORSA SUPERLEGGERA LR
TRAVEL	100 (120 or 80 with spacers)
DAMPING	> LR > Lock Out > Rebound *optional remote control kit*
SPRING	AER Air + Negative Spring
AXLE	9MM QR
STANCHIONS	Ø32MM ALUMINUM GOLD RACE COATING
STEERER	ALUMINUM 1-1/8"
BRAKE SYSTEM	6" POST MOUNT max disc 185mm
WEIGHT	1610g
COLOR	PURE WHITE MATCHING CROWN

SWITCH TA

Switch TA, our hydraulic travel adjust system is available on 55 and 44 mountain bike fork models.
The optional travel change of 40mm (on the 55 series) or 30mm (on the 44 series), maximises the comfort level on any terrain with a travel adjust system that does not affect the damping system.

The basic idea behind the system has been around for a while: In 2001, we first developed ECC – "Extension Climb Control" which we later updated with the widely successful – ETA "Extension Travel Adjust".
With our systems we can boast to have been the first to offer climbing specific travel reduction systems that reduce axle to crown length making steep climbs much easier and more comfortable. Since 2012, we have closed our proven AER system into a cartridge and have added in the upper part and introduced an hydraulic travel adjust system.
The fork is optimised to smoothly adapt to any terrain without any effort from the rider.

Based on the same motivation that first had us develop the ECC system back in 2001, we have perfected the idea in the Switch TA and turned it into an hydraulic system.
With one simple switch of a knob, you can fundamentally change the parameters of your mountain biking experience by exactly the change you expect – precise to the millimeter.

Switch TA uniquely differs from other travel adjust systems because the mountain bike fork automatically re-extends without pulling back up on the bars. It's easy and simple while still allowing for buttery smooth travel in both the reduced or extended settings, right from the beginning of the travel.
Years in the making, tested, tough and reliable, Switch TA lets you switch easily between travel options.

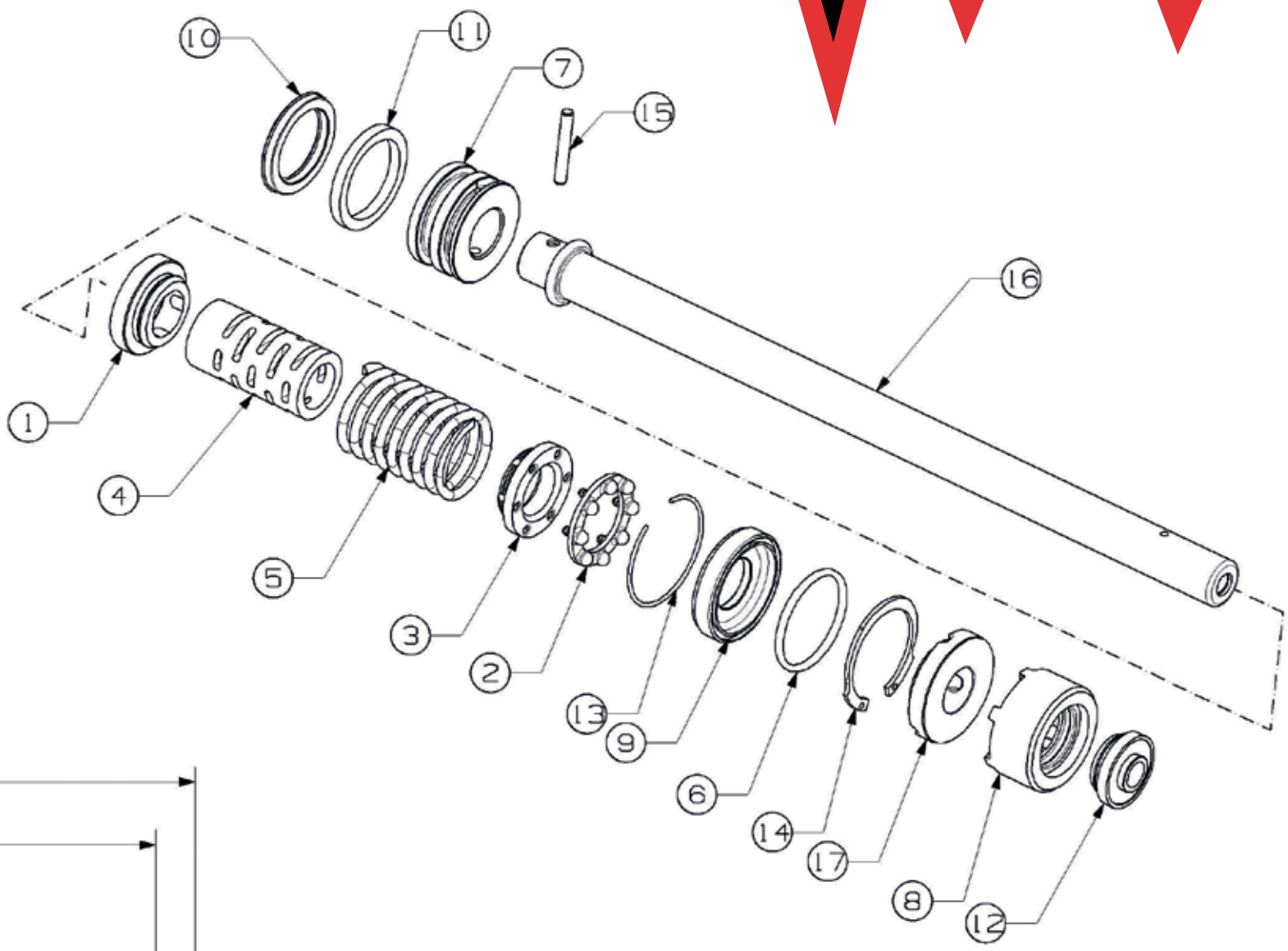

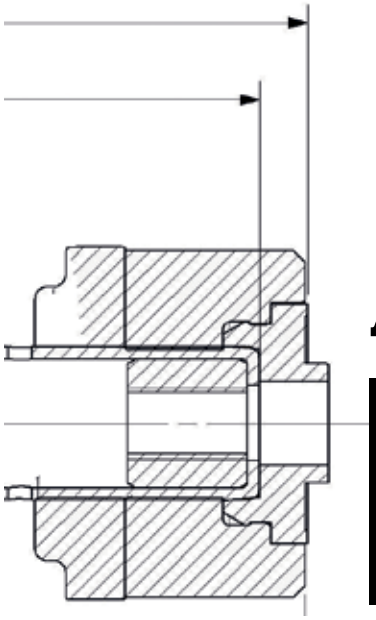

AER AIR THAT MAKES YOU FLY!

The advantages of an air system sealed inside the stanchion tube and of a negative coil spring combined into one system: smoothness and lightness. While our competitors use air systems based on two air chambers (positive and negative) we developed a system using a large sized piston sliding directly inside the stanchion tube combined with a negative coil spring.
This means less seals and lower working pressures, so less friction and a super-sensitive feeling especially on the first part of the travel. Air preassure can be quickly adjusted through a single external valve.

marzocchi
SUSPENSION PRODUCTS

29"

Forks/// TRAIL
FOURTY-FOUR 29"

NEW FOR 2013	TST MICRO UPGRADE: IMPROVED DAMPING CURVE SWITCH TA
MODEL 2013	**44 MICRO Switch TA 29"**
TRAVEL	140->110
DAMPING	> TST MICRO > Lock Out + Micro Adjust Compression > Rebound
SPRING	Switch TA Air + Negative Spring Travel Adjust
AXLE	29" QR15
STANCHIONS	Ø32MM ALUMINUM NICKEL TREATMENT
STEERER	TAPERED ALUMINUM
BRAKE SYSTEM	6" POST MOUNT max disc 203mm
WEIGHT	2090g QR15 axle incl.
COLOR	PURE WHITE MATCHING CROWN

615

marzocchi
SUSPENSION PRODUCTS

Forks/// ENDURO
FIFTY-FIVE

NEW FOR 2013	RC3 EVO V.2	TST MICRO UPGRADE: IMPROVED DAMPING CURVE
MODEL 2013	**55 RC3 EVO V.2 Titanium**	**55 MICRO Switch TA**
TRAVEL	170	160->120
DAMPING	> RC3 EVO V.2 > Rebound Piston V.2 > HiLo Auto Compression Adjust	> TST MICRO > Lock Out + Micro Adjust > Compression > Rebound
SPRING	TITANIUM + Spring Preload Air Preload	Switch TA Air + Negative Spring Travel Adjust
AXLE	QR20	QR20
STANCHIONS	Ø35MM ALUMINUM NICKEL TREATMENT TAPERED ALUMINUM	Ø35MM ALUMINUM NICKEL TREATMENT
STEERER	TAPERED ALUMINUM ALUMINUM 1-1/8"	TAPERED ALUMINUM ALUMINUM 1-1/8"
BRAKE SYSTEM	6" POST MOUNT max disc 203mm	6" POST MOUNT max disc 203mm
WEIGHT	2448g QR20 axle incl. (tapered) 2470g QR20 axle incl. (alu. 1-1/8")	2308g QR20 axle incl. (tapered) 2330g QR20 axle incl. (alu. 1-1/8")
COLOR	PURE WHITE MATCHING CROWN	PURE WHITE MATCHING CROWN

RC3 EVO V.2 NEW FOR 2013 The new 2013 55 RC3 EVO V.2 has been updated with the addition of the V.2 Technology. What do you get when you add the famous EVO to a lightweight 55 Ti? You get a fork that performs like a 888 but in a lightweight package! The 55 now also features our revolutionary RC3 EVO V.2 open bath cartridge, easy to service and with interchangeable compression shims set to meet all your riding needs, upgraded with a new rebound piston with bypass shims circuit. There's no debating the fact that the performance of open bath systems can't be beaten and we just popped the lid off of this category with the EVO V.2 Compression and Rebound valve systems now included in the 55. This fork is the ultimate enduro class killer!

NEW FOR 2013	GOLD RACE COATING	GOLD RACE COATING
MODEL 2013	**55 CR**	**55 R**
TRAVEL	170 (150 with spacer)	160
DAMPING	> CR > Compression > Rebound	> R > Rebound
SPRING	AER Air + Negative Spring	COIL + Air Preload
AXLE	QR20	QR20
STANCHIONS	Ø35MM ALUMINUM GOLD RACE COATING	Ø35MM ALUMINUM GOLD RACE COATING
STEERER	ALUMINUM 1-1/8"	ALUMINUM 1-1/8"
BRAKE SYSTEM	6" POST MOUNT max disc 203mm	6" POST MOUNT max disc 203mm
WEIGHT	2280g QR20 axle incl.	2536g QR20 axle incl.
COLOR	FLAT BLACK	FLAT BLACK

marzocchi
SUSPENSION PRODUCTS

Forks/// FREERIDE / DOWNHILL

TRIPLE-EIGHT

Light and reliable:

The 888 RC3 EVO TI is only 200g heavier than the lightest air DH forks around while offering all the advantages of a coil: stability, reliability, durability and no stress. We listened closely to our pro riders on the World Cup circuit and were able to tweak our mountain bike forks to perfection with their help and feedback.

4-bolt design upper crown:

lighter, CNC-designed & machined.
The 4-bolt design is compatible with all new handlebar clamps on the market.

RC3 EVO V.2

Our revolutionary **RC3 EVO V.2** open bath cartridge with interchangeable compression shims allows you to custom-fit your fork exactly to your riding needs. V.2 Technology upgrades the EVO with a new rebound piston with bypass shims circuit. The result is higher adjustability range in rebound, more sensitivity and added effectiveness to the setting made to the compression side. Race proven.

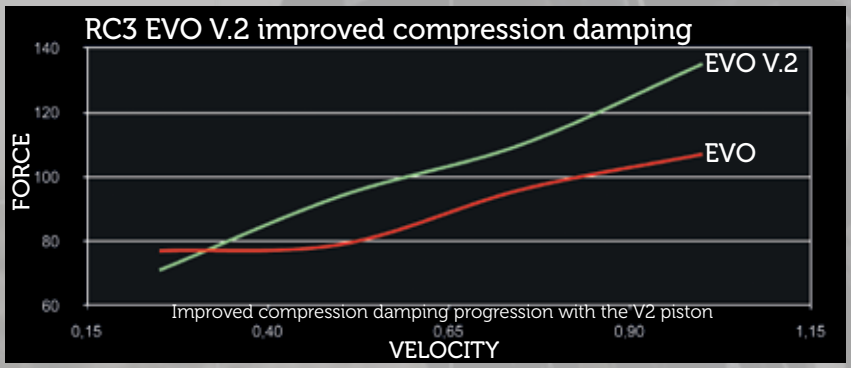

MY13 Spring Options /// 888 Series

888 RC3 EVO V.2 TITANIUM			
Spring Rate	Type	Code	Material
4,4	SOFT	Y8501480/P	TITANIUM
5,5	STANDARD	Y5141918/P	TITANIUM
6,5	HEAVY	Y5141957/P	TITANIUM
7,7	EXTRA HEAVY	Y5141958/P	TITANIUM

888 RC3 EVO V.2 - 888 CR			
Spring Rate	Type	Code	Material
4,4	SOFT	Y8501564/P	STEEL
5,4	STANDARD	Y5141923/P	STEEL
6,5	HEAVY	Y8501563/P	STEEL
7,7	EXTRA HEAVY	Y8501565/P	STEEL

marzocchi
SUSPENSION PRODUCTS

Forks/// FREERIDE / DOWNHILL
TRIPLE-EIGHT

NEW FOR 2013		GOLD RACE COATING	GOLD RACE COATING
MODEL 2013	**888 RC3 EVO V.2 Titanium** *Ti Bolts!*	**888 RC3 EVO V.2**	**888 CR**
TRAVEL	200	200	200
DAMPING	> RC3 EVO V.2 > Rebound piston V.2 > Low speed compression adjust > High speed compression shim stack valve > Volume Adjust	> RC3 EVO V.2 > Rebound piston V.2 > Low speed compression adjust > High speed compression shim stack valve > Volume Adjust	> CR > Compression > Rebound
SPRING	TITANIUM K=5.4 N/mm + Spring Preload	COIL + Spring Preload	COIL + Spring Preload
AXLE	20MM	20MM	20MM
STANCHIONS	Ø38MM ALUMINUM NICKEL TREATMENT	Ø38MM ALUMINUM GOLD RACE COATING	Ø38MM ALUMINUM GOLD RACE COATING
STEERER	ALUMINUM 1-1/8"	ALUMINUM 1-1/8"	ALUMINUM 1-1/8"
BRAKE SYSTEM	8" POST MOUNT max disc 230mm	8" POST MOUNT max disc 230mm	8" POST MOUNT max disc 230mm
WEIGHT	3029g 20mm axle incl.	3310g 20mm axle incl.	3520g 20mm axle incl.
COLOR	PURE WHITE MATCHING CROWN	PURE WHITE MATCHING CROWN	FLAT BLACK

marzocchi
SUSPENSION PRODUCTS

Forks/// DIRT JUMPING
Dirt Jumper

NEW FOR 2013	TAPERED STEERER	
MODEL 2013	**DIRT JUMPER 1**	**DIRT JUMPER 3**
TRAVEL	100	100
DAMPING	> RV > Rebound Valve	> FIX R > Fix Rebound
SPRING	COIL + Air Preload	COIL + Spring Preload
AXLE	20MM	9MM QR
STANCHIONS	Ø32MM ALUMINUM BLACK ANODIZED	Ø32MM STEEL CHROME
STEERER	TAPERED 1,5"->1-1/8" ALUMINUM 1-1/8"	STEEL 1-1/8"
BRAKE SYSTEM	6" POST MOUNT max disc 203mm	6" POST MOUNT max disc 203mm
WEIGHT	2275g 20mm axle incl. (tapered) 2297g 20mm axle incl. (alu. 1-1/8")	2730g steel steerer
COLOR	PURE WHITE	FLAT BLACK

No other fork has to be as stable as a DJ fork to catch the immense pressures that builds up when riders land on any surface. On the other hand, every extra gram of weight is a burden that needs to be carried through the air. In order to achieve both goals simultaneously, we have reengineered the suspension starting from the crown. The specific design of our DJ warrants massive stiffness and thanks to the lower parts round shape, any stress dissipates without difficulty. The deep cavity on the top reduces weight and remains flexible under the pressure from the steering tube. Since the pressure is distributed evenly along the crown and there are no specific stress points, the complete structure remains extraordinarily stable. To give such an engineering masterpiece the perfect finish, we combined it with specific lowers that support the overall structure. Selected models also come with a 20mm axle to guarantee precise steering.

marzocchi
SUSPENSION PRODUCTS

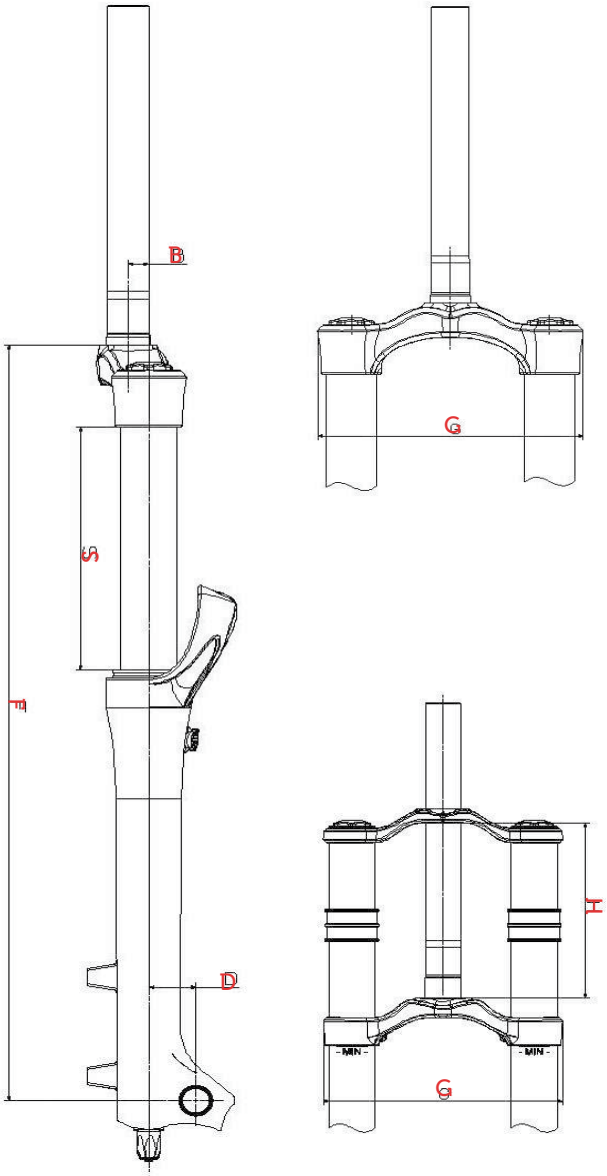

Offset Chart

MODEL 2013	TRAVEL mm S	CROWN-AXLE DISTANCE ± 5mm F	RAKE mm D+B	CROWN WIDTH mm G	UPPER/ LOWER CROWN mm H
CORSA SUPERLEGGERA LR	80 - 100 - 120	455,5 - 475,5 - 495,5	44	170	-
CORSA SUPERLEGGERA 29" CARBON					
CORSA SUPERLEGGERA 29" Aluminum Hollow Crown	80 - 100 - 120	490,5 - 510,5 - 530,5	44	173	-
44 MICRO Switch TA 29"	140 -> 110	546,5			
55 RC3 EVO V.2 Titanium	170	556			
55 MICRO Switch TA	160 -> 120	546	44	180	-
55 CR	150 - 170	536 - 556			
55 R	160	546			
888 RC3 EVO Titanium V.2 Ti Bolts!					
888 RC3 EVO V.2	200	581	46	196	161
888 CR					
DIRT JUMPER 1 20MM AXLE	100	477,5	48	173	-
DIRT JUMPER 3			44		

Shocks///
ROCO

The ROCO rear shocks continue to define the ideal path to any ride, smooth realiable performance! The ROCO rearshocks were designed and proven in the world's harshest riding conditions, Whistler BC. After many years as the shock of choice for Whistler's Bike Park, our proven reliability and performance shines with many of these shocks seeing nearly 1 million vertical feet of descending without fault.

MODEL 2013	ROCO RC World Cup coil w/ Piggyback	ROCO TST R coil w/ Piggyback
LENGHT	267x89 241x76 222x70	215,5x63,5 200x57
FEATURES	> High speed compression > Rebound > Bottom-out resistance via air valve > Spring preload	> TST trail selection technology > Rebound > Bottom-out resistance via air valve > spring preload
HARDWARE	2 PCS KIT 22x8	2 PCS KIT 22x8
WEIGHT	815g spring incl.	815g spring incl.

NEW FOR MY 2013 length 267x89

The ROCO Series is pushing the outer limits of design and function utilizing nickel coated canisters for friction free performance, large oil volumes, easily re-buildable, easy to tune, carbon fiber outer tubes, shim stack over valve compression system, low air preassure, adjustable bottom-out curve, externally adjustable compression spring rate, rebound, and fits most frame dimensions.

MODEL 2013	ROCO AIR RC WORLD CUP coil w/ Piggyback	ROCO AIR TST R coil w/ Piggyback
LENGHT	241x76 222x70	215,5x63,5 200x57
FEATURES	> High speed compression > Rebound > Bottom-out resistance via air valve > Adjustable air spring > High volume linear air spring > Nickel coated air canister > Carbon fiber layer around external air chamber	> TST trail selection technology > Rebound > Bottom-out resistance via air valve > Adjustable air spring > High volume linear air spring > Nickel coated air canister > Carbon fiber layer around external air chamber
HARDWARE	2 PCS KIT 22x8	2 PCS KIT 22x8
WEIGHT	455g	455g

Shocks///
ROCO

Lighter than ever before, every gram of the Roco Lite's 198g is tuned to deliver perfect performance and reliability giving you the best value possible for your money.

The design of the Roco Lite is much more streamlined and compact to perfectly fit into the overall look of your XC bike. Of course, we kept the lockout and rebound adjustment feature to guarantee your best riding experience.
The knobs and switch are particularly easy to reach and use thanks to its design.

You already know the dampers of the Roco series as high-end dampers for freeriders, downhill and all mountain riders with high demands. Roco dampers offer the perfect setting for every terrain and make your back wheel stick to the ground like glue.
With Roco Lite we have developed a rear damper that is designed specifically for XC and the perfect addition to your Corsa or 44 forks. As a team, the forks and shock are hard to beat when it comes to low weight and high performance.

MODEL 2013	ROCO LO	ROCO LITE
LENGHT	215,5x63,5 200x57	190,5x50 165,1x38,1
FEATURES	> Lock out > Rebound > Adjustable air spring > High volume linear air spring > Nickel coated air canister > Carbon fiber layer around external air chamber	> Lock out > Rebound > Gold race coating on air canister and main tube > Light weight for pure xc intended use
HARDWARE	2 PCS KIT 22x8	2 PCS KIT 22x8
WEIGHT	255g	198g

MY13 Spring Options /// Roco Rear Shocks

STEEL

Stroke Lbs/in	89mm 3,5″	76mm 3″	70mm 2,75″	63mm 2,5″	57mm 2,25″	50mm 2″	38mm 1,5″
225				Y5141421/P			
250	Y5141842/P		Y5141422/P	Y5141424/P		Y5141423/P	
275		Y5141428/P		Y5141427/P			
300	Y5141843/P	Y5141431/P	Y5141429/P			Y5141430/P	
350		Y5141437/P	Y5141434/P	Y5141436/P	Y5142077/P	Y5141435/P	Y5141589/P
400		Y5141441/P	Y5141439/P	Y5141654/P	Y5141771/P	Y5141440/P	Y5141590/P
450		Y5141445/P	Y5141443/P	Y5141655/P	Y5141605/P	Y5141444/P	Y5141591/P
500		Y5141449/P	Y5141447/P	Y5141656/P	Y5141606/P	Y5141448/P	
550		Y5141453/P	Y5141451/P	Y5141657/P	Y5141607/P	Y5141452/P	
600		Y5141457/P		Y5141658/P	Y5141596/P	Y5141454/P	
650				Y5141659/P	Y5141597/P	Y5141455/P	Y5141595/P
700					Y5141598/P		

TITANIUM

Stroke Lbs/in	89mm 3,5″	76mm 3″	70mm 2,75″	63mm 2,5″	57mm 2,25″	50mm 2″	38mm 1,5″
300		Y5142115/P					
350		Y5141488/P					
400		Y5141627/P					
425				Y5141479/P			
450		Y5141626/P	Y5141623/P			Y5141471/P	
500		Y5141769/P			Y5141633/P	Y5141472/P	
525				Y5141643/P			
550			Y5141625/P		Y5141641/P		

Offices e Dealer Locations

HQ
TENNECO MARZOCCHI S.R.L.
Headquarters
Via Grazia, 2
40069 Zola Predosa (Bologna) - Italy
Tel: +39.051.6168711
Fax: +39.051.758857

US
MARZOCCHI USA
MARZOCCHI U.S.A.
28476 Westinghouse Place
91355 Valencia, CA - USA
Tel: +1.661.257.6630
Fax: +1.661.257.6636

CN
MARZOCCHI ASIA
25 F A2 n° 760 Chung Ming South Road
Taichung - Taiwan ROC
Tel.: +886.4.22634382
Fax: +886.4.22634380

EU
MARZOCCHI.COM SRL
Via Poli, 5a
40069 Zola Predosa (Bologna) - Italy
Tel: +39.051.6168737
Fax: +39.051.7459504

CA
MARZOCCHI CANADA
1450 Rupert Street
North Vancouver, BC V7J 1E9
Canada
Phone: +1 604 986 3675
Fax: +1 604 986 3675

Distributors & Service Centers

DK
222 Cycles
Skolebakken 7 Vrinners - DK-8420 – Knebel
Denmark
Phone: +45 8752 2221
E-mail: kontakt@222cycles.dk
Web site: http://www.222cycles.dk
Contact: Claus Wichmann
Distributor/Service center for: **Denmark**

HK
CHUN YOUNG CYCLE CO.
132 San Fung Av. - Ground Floor - Sheung Shui,
New Territories, Hong Kong SAR
Fax: +852 26795602
E-mail: support@hkbicycle.com.hk
Contact: Mr. Jason Lee
Distributor/Service center for: **Hong Kong SAR**

JP
DIATECH PRODUCTS LTD
431, Momoyama Kakinokihama-Cho - Fushimi-Ku,
Kyoto 612-8042
Japan
Phone: +81 75 622 7755
Fax: +81 75 622 7766
E-mail: info@diatechproducts.com
Web site: http://www.diatechproducts.com
Distributor/Service center for: **Japan**

CZ
ANTONIN BARTONICEK
SKLADOVA 20 - 32600 PLZEN
Czech Republic
Phone: +42 0377240501
Fax: +42 0377448548
E-mail: info@bartonicek.cz
Web site: http://www.bartonicek.cz
Distributor/Service center for: **Czech Republic, Ukraine**

AR
CLAUDIO PERTILE
San Carlos de Bariloche - Rio Negro
Argentina
Phone: 02944-15485516
E-mail: claudio@pertile.com.ar
Distributor/Service center for: **Argentina**

CN
Eastern Solar Bicycle Co.
No. 510, De Zheng Bei Road, YueXiu District,
Guangzhou 510030
China, People's Republic
Tel.: 86-(020) 83762972,
email: easternsolar168@gmail.com
website : www.88bike.cn
Distributor/Service center for: **China**

RO
AsSport Florescu SRL
sos. Pantelimon 94 - Bucharest
Romania
Phone: +40.21.250.35.28
Fax: +40.21.250.03.83
E-mail: florescu@assport.ro
Web site: http://www.assport.ro
Distributor/Service center for: **Romania**

NL
COSMIC SPORTS BV
Passage 7, 2042KS Zandvoort - Nederland
The Netherlands
Phone: +31 235735518
Mob.: +31653765344
E-mail: info@cosmicsports.com
Web site: http://www.cosmicsports.com
Contact: Pieter Versteege
Distributor/Service center for: **BE, LU, NL**

PL
FIRMA HANDLOWA GREGORIO
UL.3 MAJA 24A - PL - 43-450 USTRON
Poland
Phone: +48 338544802
Fax: +48 338544802
E-mail: gregorio@post.pl
Web site: http://www.gregorio.pl
Distributor/Service center for: **Belarus, Lithuania, Poland**

CL
Bike Stop S.A. De C.V.
Plaza Pedro Montt 4952 - Nunoa, Santiago de Chile
Chile
Phone: +56-998830014
E-mail: vheresmann@yahoo.com
Contact: Victor Heresmann
Distributor/Service center for: **Chile**

AU
COSMIC SPORTS GmbH
Leyher Str. 47 - 90763 Fürth
Germany
Phone: +49 911 / 310 755 - 0
Fax: +49 911 / 310 755 - 55
E-mail: info@cosmicsports.at
Web site: http://www.cosmicsports.at
Distributor/Service center for: **Austria**

BO
GRAVITY ASSISTED MTN BIKING
AVE 16 DE JULIO #1490 - EDIFICIO AVENDIA
PLANTA BAJA OFFICINA #10 - LA PAZ
Bolivia
Phone: 591-2-2313-849
E-mail: eljefe@gravitybolivia.com
Contact: Alistair Matthew
Distributor/Service center for: **Bolivia**

MX
B/ SPORT
F. Ezpinoza #8, Col Cimatario - QRO Mexico CP:76030
Mexico
Phone: 442 2 14 92 03
Fax: 442 2 24 10 89
E-mail: daniel@bikestop.com.mx
Web site: http://www.bikestop.com.mx
Distributor/Service center for: **Mexico**

DE
COSMIC SPORTS GmbH
Leyher Str. 47 - 90763 Fürth
Germany
Phone: 09 11 / 310 755 - 0
Fax: 09 11 / 310 755 - 55
E-mail: service@cosmicsports.de
Web site: http://www.cosmicsports.de
Distributor/Service center for: **Germany**

SI
ID SPORT d.o.o
Kopaliska ulica 35 - SI-4220 Skofja Loka
Slovenia
Phone: +38 631320791
Fax: +38 659935827
E-mail: info@idsport.si
Distributor/Service center for: **Slovenia**

KR
BUMIL SPORTS INTERNATIONAL
B-08 2F KOEX 159 SAMSUNG-DONG - KANGNAM-KU SEOUL
Korea
Phone: 0082 2551 6992
Fax: 0082 2551 6993
E-mail: bumilco@chol.com
Distributor/Service center for: **Korea**

ID
CV RODA LINTAS KHATULISTIWA
RODALINK/PT INSERA SENA JALAN - JAWA393DESA
WADUNGASIH BUDURAN - SIDOARJO EAST JAVA
Indonesia
Phone: +62-318963951
Fax: +62-318961781
E-mail: marzocchi@rodalink.com
Web site: http://www.rodalink.com
Distributor/Service center for: **Indonesia**

EC
NDUSTRIA SWEET
Murcia 025 y Barcelona - Ambato
Ecuador
Phone: 593032410951
Web site: http://www.industriasweet.com
Contact: Patricio Navas
Distributor/Service center for: **Ecuador**

RE
C.O.I.
1,RUE GUSTAVE EIFFEL - ZAC 2000-B.P.392 - LE PORT CEDEX
Reunion
Phone: 00262 262 42 21 82
Fax: 00262 262 42 60 84
E-mail: LauryL@coi.fr
Contact: Laury
Distributor/Service center for: **Reunion**

PE
CYCLING S.R.L.
AV. Thomas Marsano 2851 - Higuereta-Surco
Peru
E-mail: cycling@terra.com.pe
Contact: Veronica Simon
Distributor/Service center for: **Peru**

CH
INTERCYCLE
Pfrundmatte 3 - CH-6210 SURSEE
Switzerland
Phone: +41 (0)41 9266511
Fax: +41 (0)41 9266352
E-mail: info@intercycle.com
Web site: http://www.intercycle.com
Distributor/Service center for: **Liechtenstein, Switzerland**

Distributors & Service Center

CO

INTERFUSION
Calle 63 No. 3- 09 - Bogotá
Colombia
Phone: 571 31279 65
E-mail: interfusion1@bsscol.com
Contact: Carlos Diego CaDavid
Distributor/Service center for: **Colombia**

CR

K BIKES
Sabanilla, Montes de Oca - San Jose
Costa Rica
Phone: (506) 2224-4537
E-mail: karjim@racsa.co.cr
Web site: http://www.kbikes.net
Contact: Sylvia Jimenez
Distributor/Service center for: **Costa Rica**

LV

BIKE PERFORMANCE
Riga
Latvia
Phone: +371 26165177
E-mail: agris@bikeperformance.lv
Distributor/Service center for: **Latvia**

UA

LEADER BIKE
Lagutenko 14 - 83086 Donetsk
Ukraine
Phone: +380622900634
Fax: +380623826168
E-mail: leaderfox@donapex.net
Web site: http://www.leader.dn.ua
Distributor/Service center for: **Ukraine**

MT

MAGRI CYCLES & SPARES
155 Eucharistic Congress Road - Mosta
Malta
Phone: +356 21414399
Fax: +356 21436377
E-mail: magricyc@maltanet.net
Distributor/Service center for: **Malta**

MX

MALI BICYCLE TECHNOLOGY
GYEPSOR U.1 H - 1211 - BUDAPEST
Hungary
E-mail: mali@mali.hu
Distributor/Service center for: **Hungary**

CA

MARZOCCHI CANADA (SERVICE CENTER ONLY)
1450 Rupert Street - North Vancouver, BC V7J 1E9 -
Canada
Phone: +1 604 986 3675
Fax: +1 604 986 3675
E-mail: naze@marzocchicanada.com
Web site: http://www.marzocchicanada.com
Distributor/Service center for: **Canada**

US

MARZOCCHI USA
28476 Westinghouse Place - VALENCIA - CA 91355
USA
Phone: +1 661 257 6630
Fax: +1 661 257 6636
E-mail: marzmail@marzocchiusa.com
Web site: http://www.marzocchi.com/spa/usa/?LN=UK
Distributor/Service center for: **Anguilla, Antigua And Barbuda, Aruba, Bahamas, The, Barbados, Bermuda, Cayman Islands, Cuba, Dominican Republic, Falkland Islands (Islas Malvinas), French Guiana, Grenada, Guadeloupe, Guyana, Haiti, Jamaica, Martinique, Montserrat, Netherlands Antilles, Paraguay, Puerto Rico, Saint Kitts And Nevis, Saint Lucia, Saint Vincent And The Grenadines, Suriname, Trinidad And Tobago, Uruguay, USA, Venezuela, Virgin Islands (British), Virgin Islands (US)**

IT

MARZOCCHI.COM SRL
Via Poli, 5a - 40069 - Zola Predosa (Bologna) - Italy
Phone: +39 051 6168737
Fax: +39 051 7459504
E-mail: mtbitalia@tenneco.com
Web site: http://www.marzocchi.com
Distributor/Service center for: **Croatia, Cyprus, Denmark, Finland, Greece, Israel, Italy, Latvia, Spain**

MY

LeRun Industries Sdn Bhd (3518-W)
No 29 & 31, Jalan TPP 5/17, Taman Perindustrian Puching, Section 5,
47100 Puchong, Selangor Darul Ehsan, Malaysia
Tel: +603 8061 0222
Fax: +603 8062 4855
Email: product@lerun.com.my
Distributor/Service center for: **Malaysia**

CA

NORCO PRODUCTS LTD.
1465 KEBET WAY PORT COQUITLAM - PORT COQUITLAM,
B.C. V3C 6L3
Canada
Phone: +1 604 552 2930
Fax: +1 604 552 2948
E-mail: robp@norco.com
Web site: http://www.norco.com
Distributor/Service center for: **Canada**

TH

PROBIKE Co. Ltd.
237/2 Sarasin Rd., Lumpinee Pathumwan - 10330 Bangkok
Thailand
Phone: +66 2 2533384
Fax: +66 2 2541078
E-mail: qa@probike.co.th
Web site: http://www.probike.co.th
Distributor/Service center for: **Thailand**

TW

Rangers MTB Headquarters Co., Ltd
Street Address: No. 11, Lane 23 -
Xi Zhou St. Wen Shan District. Taipei City
Taiwan
Phone: +886 2 86631543
Fax: +886 2 86633034
E-mail: service@rangers-mtb.com.tw
Web site: http://www.rangers-mtb.com.tw
Distributor/Service center for: **Taiwan**

SG

RODALINK (S) Pte Ltd
#03-07 Eunos Technolink - 7, Kaki Bukit Road 1 - 415937
Singapore
Phone: 65-6749 3239
Fax: 65-6749 3531
E-mail: marzocchi@rodalink.com
Web site: http://www.rodalink.com
Contact: Eddy Pang
Distributor/Service center for: **Singapore, Vietnam**

AU

SCV IMPORTS
PO BOX 3213 - NSW 2259 - Tuggerah
Australia
Phone: +61 2 4353 2633
Fax: +61 2 4353 2533
E-mail: service@scvimports.com.au
Web site: http://www.scvimports.com.au
Contact: Stuart
Distributor/Service center for: **Australia**

RU

SERGEY GOREMYKINE
123364 - 43-91 St. Svobody - Moscow
Russia
Phone: +74956132938
E-mail: sergey@marzocchi.ru
Web site: http://www.marzocchi.ru
Distributor/Service center for: **Estonia, Russia**

BR

SESSION BRASIL
R. BELA CINTRA, 299 – CONJ. 22 - SÃO PAULO
Brazil
Phone: 55.11.2619.7074
E-mail: sac@sessionbrasil.com
Web site: http://www.sessionbrasil.com
Distributor/Service center for: **Brazil**

GB

SOLENT UK Ltd. t/a Windwave
Units D2-D3 - Heritage Business Park - Heritage Way -
Gosport Hants PO12 4BG
United Kingdom
Phone: +44 (0)23 92521912
Fax: +44 (0)23 92522625
E-mail: office@windwave.co.uk
Web site: http://www.windwave.co.uk
Distributor/Service center for: **Ireland, United Kingdom**

NO

SPORTPARTNER AS
POSTBOKS 555 - Bergen 5884
Norway
Phone: +47 (0) 55 50 64 64
Fax: +47 (0) 55 50 64 65
E-mail: post@sportpartner.no
Web site: http://www.sportpartner.no
Distributor/Service center for: **Norway**

GR

Tsirikos SA
2 Perikleous St - Neo Psichico 15451 Athens
Greece
Tel.: 0030 210 6715814
Fax: 0030 210 6715815
E-mail: info@tsirikosbikes.gr
Web site: http://www.tsirikosbikes.gr
Distributor/Service center for: **Grecia**

SE

Vartex AB
Batterivägen 14 - 43232 - Varberg
Sweden
Phone: +46 340 64 60 00
Fax: +46 340 61 11 90
E-mail: info@vartex.se
Distributor/Service center for: **Sweden**

SK

VELO SPRINT S
Trnavska 40 - 949 01 Nitra
Slovakia
Phone: +42 1376578399
Fax: +42 1376578398
E-mail: jsladek@velosprint.sk
Contact: Ing.Jan Sladek
Distributor/Service center for: **Slovakia**

BG

VELOMANIA LTD
Gueshevo N.83 str. - Sofia 1330
Bulgaria
Phone: +359 (2) 8127063
Fax: +359 (2) 8127061
E-mail: info@velomania-bg.com
Web site: http://www.velomania-bg.com
Contact: Evgeni Tanev
Distributor/Service center for: **Bulgaria**

NZ

WIDE OPEN DISTRIBUTORS LTD
57 Brunswick Drive - Te Ngae - Rotorua
New Zealand
Phone: Ph + 64 7 3453280
E-mail: sales@wideopen.co.nz
Web site: http://www.wideopen.co.nz
Distributor/Service center for: **New Zealand**

FR

X1 RACING SUSPENSION
25, rue des Mûriers - 34120 Nézignan L'Evêque
France
Phone: 04 67 32 88 25
Fax: 04 67 32 88 25
E-mail: contact@x1-racing-suspension.com
Web site: http://www.x1-racing-suspension.com
Distributor/Service center for: **France**

SE

Yellow Saddle Cycling
94 Brazos Street - Berario, Jhb.
South Africa
Phone: +27 (0)82 3086847
E-mail: johan@yellowsaddle.co.za
Web site: http://www.yellowsaddle.co.za
Contact: Johan Bornman
Distributor/Service center for: **South Africa**

PH

YKK TRADING
68-74 Legaspi St. - 6000 Cebu City
Philippines
Phone: 6332-2558853
E-mail: bikeguru@ykkbikes.com
Web site: http://www.ykkbikes.com
Contact: James Montecillo
Distributor/Service center for: **Philippines**

LIVE IT UP. 2013

TENNECO

marzocchi
SUSPENSION PRODUCTS

www.marzocchi.com

The 888 RC3 Evo Titanium has made the Dirt 100 for the 2nd year running,
while the 55 RC3 Titanium has made it for the 3rd year in row and also scooped the Singletrack recommended award.