MARZOCCHI

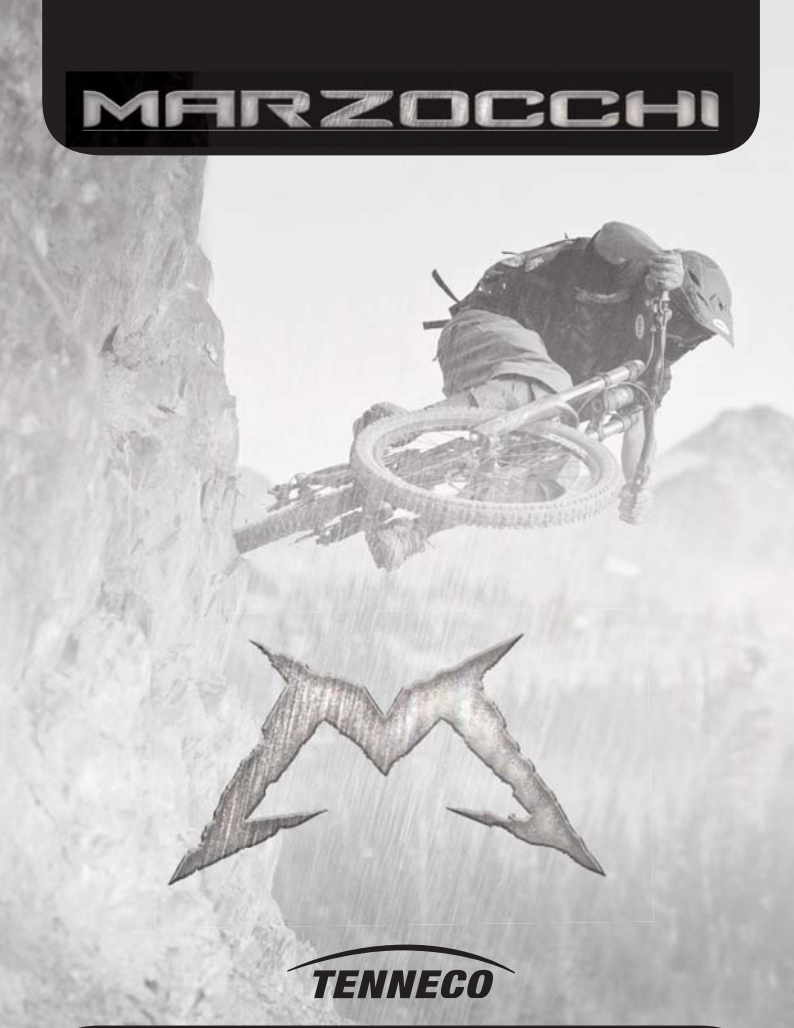

TENNECO

9001387 FORK MANUAL

MARZOCCHI

WARNING!

Per la versione completa del manuale d'uso riferirsi al sito www.marzocchi.com

You can download the complete version of the owner manual from internet at www.marzocchi.com

SUMMARY

	GB
GENERAL WARNING	3
OWNER MANUAL	4

INTENDED USE CHART

	TREKKING / CROSS COUNTRY	CROSS COUNTRY / ALL MOUNTAIN	ALL MOUNTAIN / FREERIDE	4X / DIRT JUMPER	EXTREME FREERIDE / DOWNHILL
	WARNING USE ONLY FOR: • TREKKING / CROSS COUNTRY DO NOT USE FOR: • ALL MOUNTAIN / FREERIDE • 4X / DIRT JUMPER • DOWNHILL / EXTREME FREERIDE Misuse or abuse of these forks can result in fork failure, an accident, serious injury or death FOR PROPER USE INSTRUCTIONS SEE OWNERS MANUAL OR WWW.MARZOCCHI.COM PER CORRETTO UTILIZZO RIFERIRSI AL MANUALE D'USO O AL SITO WWW.MARZOCCHI.COM POUR UNE UTILISATION CORRECTE , VEUILLEZ VOUS RÉFÉRER AU MANUEL OU SUR LE SITE WWW.MARZOCCHI.COM FÜR E ZUM RICHTIGEN EINSATZ DER PRODUKTE LESEN SIE BITTE DIE BEDIENUNGSANLEITUNG ODER SCHAUEN SIE UNTER WWW. MARZOCCHI.COM SIGA LAS INSTRUCCIONES CORRECTAS EN EL MANUAL DE USUARIO O EN WWW.MARZOCCHI.COM	WARNING USE ONLY FOR: • CROSS COUNTRY / ALL MOUNTAIN DO NOT USE FOR: • FREERIDE • 4X / DIRT JUMPER • DOWNHILL / EXTREME FREERIDE Misuse or abuse of these forks can result in fork failure, an accident, serious injury or death FOR PROPER USE INSTRUCTIONS SEE OWNERS MANUAL OR WWW.MARZOCCHI.COM PER CORRETTO UTILIZZO RIFERIRSI AL MANUALE D'USO O AL SITO WWW.MARZOCCHI.COM POUR UNE UTILISATION CORRECTE , VEUILLEZ VOUS RÉFÉRER AU MANUEL OU SUR LE SITE WWW.MARZOCCHI.COM FÜR HINWEISE ZUM RICHTIGEN EINSATZ DER PRODUKTE LESEN SIE BITTE DIE BEDIENUNGSANLEITUNG ODER SCHAUEN SIE UNTER WWW. MARZOCCHI.COM SIGA LAS INSTRUCCIONES CORRECTAS EN EL MANUAL DE USUARIO O EN WWW.MARZOCCHI.COM	WARNING USE ONLY FOR: • ALL MOUNTAIN / FREERIDE DO NOT USE FOR: • 4X / DIRT JUMPER • DOWNHILL / EXTREME FREERIDE Misuse or abuse of these forks can result in fork failure, an accident, serious injury or death FOR PROPER USE INSTRUCTIONS SEE OWNERS MANUAL OR WWW.MARZOCCHI.COM PER CORRETTO UTILIZZO RIFERIRSI AL MANUALE D'USO O AL SITO WWW.MARZOCCHI.COM POUR UNE UTILISATION CORRECTE , VEUILLEZ VOUS RÉFÉRER AU MANUEL OU SUR LE SITE WWW.MARZOCCHI.COM FÜR HINWEISE ZUM RICHTIGEN EINSATZ DER PRODUKTE LESEN SIE BITTE DIE BEDIENUNGSANLEITUNG ODER SCHAUEN SIE UNTER WWW. MARZOCCHI.COM SIGA LAS INSTRUCCIONES CORRECTAS EN EL MANUAL DE USUARIO O EN WWW.MARZOCCHI.COM	WARNING USE ONLY FOR: • 4X / DIRT JUMPER DO NOT USE FOR: • ALL MOUNTAIN / FREERIDE • DOWNHILL / EXTREME FREERIDE Misuse or abuse of these forks can result in fork failure, an accident, serious injury or death FOR PROPER USE INSTRUCTIONS SEE OWNERS MANUAL OR WWW.MARZOCCHI.COM PER CORRETTO UTILIZZO RIFERIRSI AL MANUALE D'USO O AL SITO WWW.MARZOCCHI.COM POUR UNE UTILISATION CORRECTE , VEUILLEZ VOUS RÉFÉRER AU MANUEL OU SUR LE SITE WWW.MARZOCCHI.COM FÜR HINWEISE ZUM RICHTIGEN EINSATZ DER PRODUKTE LESEN SIE BITTE DIE BEDIENUNGSANLEITUNG ODER SCHAUEN SIE UNTER WWW. MARZOCCHI.COM SIGA LAS INSTRUCCIONES CORRECTAS EN EL MANUAL DE USUARIO O EN WWW.MARZOCCHI.COM	
TXC	•				
CORSA	•				
MARATHON	•				
22	•				
44		•			
44 29"		•			
55			•		
4X				•	
DIRT JUMPER				•	
66					•
888					•

Table 1 - *Intended use chart*

ENGLISH

I. USE OF THIS MANUAL

I.I General warnings

WARNING!

Descriptions preceded by this symbol contain information, instructions, or procedures, which, if not followed, can result in damage or malfunction of the suspension, environmental damages, accidents, personal injury or death.

REMEMBER

Descriptions preceded by this symbol contain information, or procedures recommended by Tenneco Marzocchi for optimum use of the suspension.

WARNING!

Failure to follow the warnings and instructions could result in malfunction, accidents, personal injury or death.

WARNING!

Failure to properly match the suspensions to your frame could cause malfunction of the suspension, resulting in a loss of control of the bicycle, and possible serious injury or death to the rider.

Please note that throughout this manual, reference is made that "accidents" could occur. Any accident could result in loss of bicycle control, damage to your bicycle or its components, and more importantly, cause you or a bystander to sustain severe personal injury or death.

Please be advised that suspension system installation, service and repair tasks require specialized knowledge, tools and experience. General mechanical aptitude may not be sufficient to properly install, service or repair your suspension system. Installation and maintenance of the suspension system must be carried out only by an authorized Marzocchi Service Center. Improper installation, service or repair may lead to accidents, resulting in personal injury or death.

For further information, please consult the www.marzocchi.com web site or contact your nearest Marzocchi Service Center. A list of service centers can be found on our web site.

I.II General safety recommendations

Never make any modifications whatsoever to any component of the suspension system. The components of the Marzocchi suspension system are designed as a single integrated system. To avoid compromises in terms of safety, performance, durability and function, use only original Marzocchi components for substitution.

It is necessary to learn how to ride your bike without going beyond your personal capabilities. Always use the proper safety equipment, and ensure that all your riding equipment is in excellent condition.

Damage to your suspension can occur if your bicycle strikes any overhead object, such as garages, bridges, tree limbs or other obstacles, while attached to a bicycle carrier, at any speed.

Always check your suspension and if there are deformations, cracks, impact marks, stress marks or bent parts, no matter how slight, it is necessary to have the suspension checked by an authorized Marzocchi Service Center.

The suspension system will show signs of wear and tear through time. Have your bike periodically checked for oil leaks, cracks, chips or other signs of wear and tear by an authorized Marzocchi Service Center.

When using a bicycle carrier (car roof rack or rear-hitch mount), be sure to fully loosen the quick release fastener on the carrier when mounting or removing your bicycle. Additionally, be sure to always keep your bicycle in a vertical position when mounting or removing your bicycle to and from the bicycle carrier. Failure to fully loosen the quick release fastener, or any bending action while mounting or removing your bicycle to and from the carrier, could result in scratching, bending, or cause other damages your suspension system.

Learn and follow the local bicycle laws and regulations, and obey all traffic signals, signs and laws while you ride.

Always wear a properly fitted and fastened bicycle helmet that has been approved by ANSI, SNELL or CE, and any other safety equipment necessary for your riding style.

When riding in wet conditions, remember that the stopping power of your brakes is greatly reduced and that the adherence of the tires on the ground is considerably reduced. This makes it harder to control and stop your bicycle. Extra care is required when riding your bicycle in wet conditions to avoid an accident.

Avoid riding at night because it is more difficult for you to be seen by traffic, and it is more difficult for you to see obstructions on the ground. If you do ride at night, or in conditions of poor visibility, equip your bicycle with and use a headlight and a taillight. Wear clothes that are snug-fitting and that make you visible to traffic, such as neon, fluorescent, or other bright colors.

Carefully read and follow all instructions and warnings supplied.

I.III Before every ride

WARNING!

Do not ride your bicycle if it does not pass this pre-ride test.

Check your suspensions for any leaks or other traces of oil, which is indicative of a problem with your suspension. Be sure to turn your bicycle upside down to check areas such as the underside of the crown for evidence of an oil leak.

Be sure that all components of the suspensions and the bicycle, including the brakes, pedals, handgrips, handlebars, frame and seating system, are in optimum condition and suitable for use.

Be sure that none of the components of your suspension system or of the bicycle are bent, deformed or otherwise damaged.

Check that all quick release fasteners, nuts and bolts are properly fastened. Bounce the bicycle on the ground while listening and looking for anything that may be loose.

Be sure that your wheels are perfectly aligned. Spin the wheels to ensure that they do not wobble up and down or from side to side, and that they do not make contact with the suspension legs or brake pads while rotating.

Be sure that all cables and other components of your braking system are in their proper position, properly adjusted and that your braking system is functioning properly.

Be sure that your tires are inflated to the correct pressure and that there is no damage whatsoever in the tread or sidewall of the tire.

Check that all reflectors are clean, straight and securely mounted.

II. INTENDED USE INSTRUCTIONS

II.I Select the correct riding style

Marzocchi suspensions are among the most durable and technologically advanced suspension systems on the market today. However, no suspension can withstand misuse, abuse or improper use that, over a short period of time, can cause your suspensions to fail when you least expect it. It is critical that you select and use the suspension system that is appropriate for your riding style, and that you use it properly.

Select the suspension that is appropriate for your riding style by referring to the table «intended use chart» (Table 1, page 2). Please see your Marzocchi retailer, or contact Marzocchi directly, if you require assistance in selecting the correct suspension.

II.II Identifying your intended use

Trekking/Cross-Country: Riding along hilly trails where some bumps and smaller obstacles, such as rocks, roots, or depressions, may be encountered. Trekking/Cross-Country riding does not include jumps or “drops” (riding off rocks, fallen trees or ledges) from any height. These forks must be used with tires specifically designed for trekking/cross country riding, and disk, rim or linear pull brakes. You should only attach generators and racks, if any, to the designated mounting points provided on the forks.

Cross Country/All Mountain: This riding style is for skilled Cross Country riders, and involves moderately steep slopes and medium sized obstacles. Cross Country/All Mountain forks should be used only with rim or linear pull brakes or with disk brakes, and those frames, wheels and other components specifically designed for this riding style. The brakes must be attached to the designated mounting points provided on the fork. Never make any modification to your fork when attaching any equipment.

All Mountain/Freeride: This riding style is for skilled riders, and involves steep, aggressive slopes, large obstacles, and moderate jumps. Freeride forks should be used only with disk brakes, and those frames, wheels and other components specifically designed for this riding style. The disk brakes must be attached to the designated mounting points provided on the fork. Never make any modification to your fork when attaching any equipment.

4X/Dirt Jumper: This “BMX” or “motocross” style of riding is only for the most skilled riders, and involves jumping from one mound of dirt to another. It also includes riding over and around “urban obstacles” such as man-made, or other concrete, structures, or racing on a track consisting of jumps made from mounds of dirt which the rider must negotiate by jumping or turning at speed. These forks should only be used with disk brakes, and those frames, wheels and other components specifically designed for this riding style. The disk brakes must be attached to the designated mounting points provided on the fork. Never make any modification to your fork when attaching any equipment.

Extreme Freeride/Downhill: This discipline is only for professional or highly skilled riders. It includes relatively high jumps or “drops’ and negotiating larger obstacles such as boulders, fallen trees, or holes. These forks should be used only with disk brakes, and those frames, wheels and other components specifically designed for this riding style. The disk brakes must be attached to the designated mounting points provided on the fork. Never make any modification to your fork when attaching other equipment.

⚠ WARNING!

Failure to properly overcome obstacles on the trail, or failure to properly land after a jump or drop, could cause your suspensions to fail, resulting in a loss of bicycle control, serious injury, or death to the rider.

Learn how to properly flow around obstacles on the trail. Hitting obstacles such as rocks, trees or holes straight-on puts forces on your suspension it was not designed to absorb. Landing improperly after a jump or drop also puts forces on your suspension it was not designed to absorb.

You should only perform jumps or drops when a transition, or down ramp, is available to help your bicycle absorb the impact forces generated during the landing by having both wheels smoothly make contact with the transition, or down ramp, at the same time. Any other type of landing is dangerous, as it could result in accidents or damages to the components.

Ensure that the steepness and length of the transition, or down ramp, are suitable for the height from which you jump or drop and that you are skilled enough to perform them.

1. INTRODUCTION

1.1 Conventions

1.1.1 Orientation of the fork

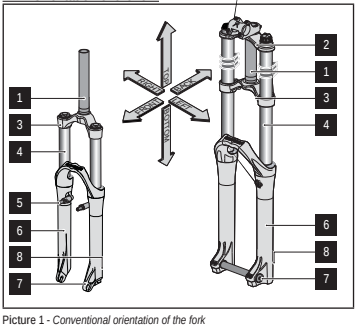

Picture 1 - *Conventional orientation of the fork*

1.1.2 Main parts of the fork

1. Steer tube, 2. Upper crown, 3. Lower crown, 4. Stanchion tube, 5. Brake boss, 6. Monolite, 7. Dropout, 8. Disc brake mount.

2. TECHNICAL INFORMATION

2.1 Spring system

Inside MARZOCCHI forks you will find coil springs, or air, used as suspension mechanism.

2.2 Damping system

The damping load that is generated during compression and rebound of the fork legs can be adjusted by hydraulic valve pumping rods, or by special cartridges.

⚠ WARNING!

NEVER use the compression lock position while riding downhill as the fork will not react properly when hitting obstacles, and can result in a loss of control of the bicycle, an accident, personal injury, or death.

TST MICRO (Terrain Selection Technology With Micro Adjuster)

TST Micro is the greatest evolution of TST closed cartridge hydraulic systems. The red knob installed in the lower part of the fork leg adjusts the rebound. The black-coloured top knob sets Micro System to adjust the compression. The Micro adjustment (golden knob on the top of the fork leg) sets the operating threshold of compression by adapting the behaviour of the suspension system to the type of terrain. Lockout is activated by turning the golden knob completely in the closed position, then shifting the red lever. In some models, the TST system can be operated through the remote control on the handlebar.

TST2 (2 position Terrain Selection Technology)

TST 2 is the basic version of the TST systems: the lower red-coloured knob allows adjusting the rebound. The black-coloured top knob sets the lockout, thus assuring a pleasant riding on all terrain . In some models, lockout can be operated through the remote control on the handlebar.

LR Damper

The red-coloured lower knob allows adjusting the rebound. The black-coloured top knob sets the lockout, thus assuring a pleasant riding on all terrain. In some models, lockout can be operated through the remote control on the handlebar.

RLO (Rebound Lock Out)

The lower knob allows adjusting the rebound. The black-coloured top knob sets the lockout, thus assuring a pleasant riding on all terrain . In some models, lockout can be operated through the remote control on the handlebar.

LO (Lock Out)

The black-coloured top knob sets the lockout, thus assuring a pleasant riding on all terrain . In some models, lockout can be operated through the remote control on the handlebar.

RC3 (3rd Generation Rebound/Compression Cartridge - Open Bath)

It is the leading-edge Open Bath technology by Marzocchi. The RC3 damping system ensures the maximum freedom of adjustment for a free and performing way of riding. The rebound control can be adjusted by means of the red-coloured knob on the fork top. The system allows the control of the compression adjustment golden knob, which is installed in the lower part of the fork leg.

RC3 EVO

It is the most advanced Marzocchi Open Bath System. RC3 EVO cartridge allows to have the maximum freedom in the setting. In addition to the external rebound adjuster (red knob on top) and the low speed compression (golden knob on the bottom), it is the possibile to install different shim stacks in order to get a customized compression setting.

RV (Rebound Valve - Open Bath)

The RV (Rebound Valve) pumping element is the evolution of the well-proven SSVF Open Bath system. The system controls the rebound speed. If you correctly adjust the red-coloured knob on the lower part of the fork leg, you can keep the wheel on contact with the soil in all riding conditions.

IRA (Internal Rebound Adjuster - open bath)

The IRA (Internal Rebound Adjust) system, which is similar to the RV system, controls the rebound speed and keeps the wheel on contact with the soil in all riding conditions. The Adjuster is installed inside the cartridge and the rebound can be set using the specific adjustment wrench.

R (Rebound Cartridge)

The R cartridge is the Entry Level cartridge to adjust rebound through the black-coloured knob on the fork top.

R Damper

The R Damper system to adjust rebound through the red-coloured knob on the fork bottom.

Fixed Damping

The Fixed Damping cartridge allows the hydraulic control of the rebound and is set by Marzocchi.

CV (Compression Valve - open bath)

The CV pumping element is the evolution of the well-proven SSVF Open Bath systems. The system controls the compression. The golden knob installed in the lower part of the fork leg adjusts the compression.

VA (Volume Adjuster - open bath)

By means of the VA adjuster, every rider can adjust the air volume inside the fork by simply turning the VA knob. The variation of the volume inside the fork is the same as a virtual modification of oil levels. By simply rotating the chrome-coloured adjuster you can modify the air volume, thus achieving a different progressivity equivalent to a variation in the internal oil volume.

2.3 Lubrication and cooling

The forks can use different lubrication and cooling technologies.

In Open Bath systems, the oil inside the fork leg, besides being a crucial element for the hydraulic operation, accomplishes all cooling and lubrication needs for the internal sliding parts. In addition, if the oil volume is varied within the recommended ranges, it will be an additional setting element, thus allowing the modification of suspension system progressivity. Compared to the systems equipped with sealed cartridges, the Open Bath system allows reducing lubrication operations of the sliding parts.

The Open Bath system assures an excellent lubrication even from the first "bottoming" of the fork, as well as in all use and weather conditions.

In the systems equipped with sealed cartridge, special grease or oil is used for the lubrication of the internal sliding parts. The aforesaid lubricant does not work as additional setting element; therefore, the pre-established levels must be carefully observed.

The best lubrication of the internal parts is achieved during the use, when the stress and the bottoming of the fork allow that the oil lifts due to "chattering" from the bottom of the fork leg until reaching and lubricating the bushings.

2.4 Sliding bushing and oil seals

The guide of the stanchion tubes inside the sliders is formed by two bushings with Teflon® facing, with very low static friction.

In 44,55,66,888, Corsa, Marathon and 4X models the notorious smoothness of Bomber models has been overcome thanks to the use of newly designed bushings and seals offering a coefficient of friction that is 30% lower, as well as constant performances in time. This allows the optimum combination between the fork legs and the sliders. The new bushings have slots that help the oil to go up and improve the lubrication, thus offering an incomparable smoothness. At the top end of the monolite, there is a sealing group that prevents oil leakages, as well as the access of contaminating agents into the lubricant and into the hydraulic cartridges.

A special foam ring is installed in 44, 55, 66, 888, Corsa, Marathon and 4X models and in the sealing group allowing a better smoothness if periodically lubricated.

3. INSTALLATION

3.1 Installing on the frame

The fork is supplied with an "A-Head Set" steer tube to be cut according to the frame size the fork is being installed on. Installing the fork on the bicycle frame is a delicate and critical operation that must be carried out by specialized personnel.

⚠ WARNING!

Suspension system installation requires specialized knowledge, tools and experience. General mechanical aptitude may not be sufficient to properly install your suspension system. Please have your suspension system installed only by an authorized Marzocchi Suspension Center. Improper installation can result in failure of your Marzocchi Suspension System, an accident, personal injury, or death.

The interference of the cylinder on the base and the play between the cylinder and frame are particularly critical factors for the safety of the operator. For this reason, maintenance and installation must be performed exclusively at authorised technical assistance centres, which have suitable equipment and specific knowledge.

⚠ WARNING!

On all dual crown Marzocchi forks, the lower crown is clamped to the stanchions using bolts. In this case, please be aware of the following precautions during installation.

In case of oversized diameter areas on the stanchions, the crowns clamping can only be done in the shaded area shown in Picture 2A.

In case of reference notches on the stanchions, the lower part of the lower crown must be positioned above the MIN notch and maximum 7 mm above the reference.

The distance between the inflated tire and the lower part of the lower crown, when the fork is at travel's end, must be at least 4 mm.

On the dual crown forks the maximum length of the steer tube between the two crowns (see Picture 2B) must be smaller than the values (H) shown in Table 1.

NOTE

A protective film to be removed before use protects the stickers.

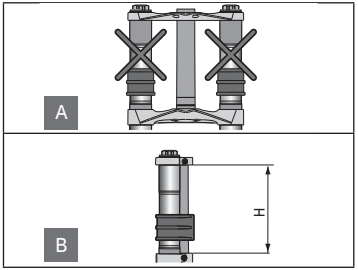

Picture 2 - *Dual crown forks installation on the frame: (2A) Crowns fastening, (2B) Steer tube maximum length between crowns*

Model	Max length between crowns (H)
888 (except 888 RV)	160 mm (180 mm with high top crown (optional))
888 RV	158 mm

Table 1 - *Steer tube maximum length between crowns*

3.2 Installing the brake system

Installing the brake system is a delicate and critical operation that must be carried out by specialized personnel.

WARNING!

Brake system installation requires specialized knowledge, tools and experience. General mechanical aptitude may not be sufficient to properly install your brake system. Please have your brake system installed only by an authorized Marzocchi Service Center. Improper installation of a disk brake system can overstress the caliper mountings, which may cause the caliper mountings to break, resulting in loss of control of the bicycle, an accident, personal injury, or death. Be sure that the brake system installation is also performed in strict compliance with the instructions provided by the brake system manufacturer.

Use only brake systems that comply with the forks specifications, taking into consideration the contents of the summarizing tables contained in this manual.

WARNING!

A special thread-lock treatment is applied to the thread on the bolts (see 2A,2B in Table 2). Bolts that are installed and later removed lose this thread-lock treatment, and therefore can never be used again.

WARNING!

Make sure, before every ride, that the brake cable of the disk brake system is correctly connected to the proper mounting (see 2E, 2F, 2G & 2H in Table 2).

WARNING!

The brake cable must never touch the crown and stanchions.

WARNING!

Before installing a Post Mount braking system, check that the protection film has been removed from the brake caliper.

WARNING!

The fastening screw thread of the disk brake caliper must be screwed by at least 10 mm on the brake support of the fork monolith. Make sure that the fastening screws are not damaged and that they are tightened with a torque spanner according to the specifications of the brake system manufacturer. In any case tighten them by a max. tightening torque of 10 Nm.

V-BRAKE SYSTEM SETTING - REMOVABLE SETTING

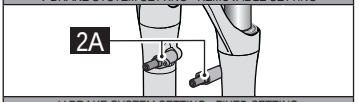

V-BRAKE SYSTEM SETTING - FIXED SETTING

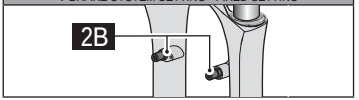

BRAKE DISK SYSTEM SETTING - XC INTL STD

BRAKE DISK SYSTEM SETTING - POST MOUNT

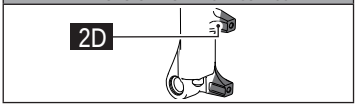

BRAKE DISK SYSTEM SHEATH SUPPORTS SETTING

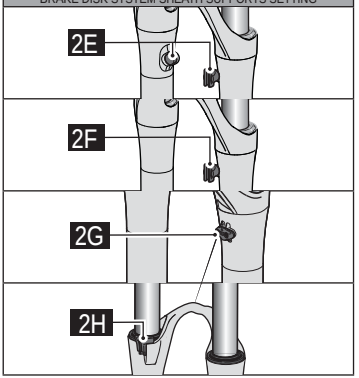

Model	V-Brake System Setting	Brake Disk System Setting	Max disk dimension [1]
TXC	Fixed Setting (see Picture 2B)	XC INTL STD 6" + DRUM brake (see Picture 2C)	160 mm
22	Removable Setting (see Picture 2A) [2 - 3]	Post Mount 6" (see Picture 2D / 2E)	185 mm
44 TST2 - 44 RLO (Drop Out Standard versions)		Post Mount 6" (see Picture 2D / 2E)	203 mm
CORSA - MARATHON	NO	Post Mount 6" (see Picture 2D/ 2G)	185 mm
44 Micro TI - 44 RC3 Titanium		Post Mount 6" (see Picture 2D/ 2G)	203 mm
44 29" Micro Ti - 44 29" TST2		Post Mount 6" (see Picture 2D/ 2G)	203 mm
44 TST2 - 44 RLO (QR15 versions)		Post Mount 6" (see Picture 2D / 2F)	203 mm
4X - 55 - DIRT JUMPER		Post Mount 6" (see Picture 2D / 2G)	203 mm
66 - 888 (888 RV)		Post Mount 8" (see Picture 2D / 2G)	229 mm
888 RV - DJ COMP - Z1		Post Mount 6" (see Picture 2D / 2H)	203 mm
DJ COMP		INTL STD 6" (see Picture 2C / 2H)	203 mm

Table 2 - *Braking system settings*

[1] Installation is only possible when the specific adapter is supplied by the brake system manufacturer. - [2] The V-brake axles are not supplied (accessory code : 850996/C). - [3] The OEM forks cannot be equipped of V-brake mount.

3.3 Wheel installation

Model	Max tire dimension
22	2,2" x 26"
CORSA - MARATHON	2,3" x 26"
44	2,4" x 26"
4X - DIRT JUMPER - DJ COMP - Z1	2,6" x 26"
55 - 66 - 888	2,8" x 26"
TXC	2,0" x 28"
44 29"	2,4" x 29"

Table 3 - *Maximum tire dimension*

After installation, you must verify that the distance between the inflated tire and the lower part of the lower crown is at least four (4) mm when the fork legs are fully compressed.

Before every use you must verify that:

- The tire turns freely;
- The tire does not make any contact with the brake arch or V-Brake system.

3.4 Wheel axle securing system

The system for securing the wheel axle to the fork sliders can be standard, which uses the traditional advanced dropouts, or have a 20 mm diameter through-hole axle or with QR quick release axle.

Forks that are created for more intensive use are provided with a wheel fastening system, which originates from the motocross application and uses a 20 mm axle.

The new QR system allows combined hardness and easy installation.

WHEEL AXLE SECURING SYSTEM WITH STANDARD DROPOUTS

CORSA - MARATHON - 44 - 22 - DIRT JUMPER - DJ COMP - TXC

WHEEL AXLE SECURING SYSTEM WITH 20 MM DIAMETER THROUGH-HOLE AXLE

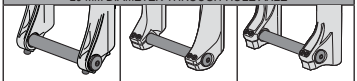

4X - DIRT JUMPER - DJ COMP - Z1	888 RV	888 (excluding 888 RV)

WHEEL AXLE SECURING SYSTEM WITH QR20 QUICK RELEASE AXLE

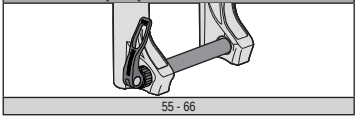

55 - 66

WHEEL AXLE SECURING SYSTEM WITH QR15 QUICK RELEASE AXLE

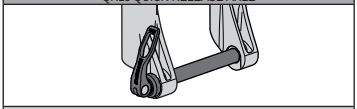

44 - 44 29"

Table 4 - *Wheel securing systems*

3.4.1 Wheel installation on a fork with standard securing system

CORSA	MARATHON	44	22
DIRT JUMPER	DJ COMP	TXC	

Install the wheel in compliance with the wheel manufacturer's instructions. For correct fork function after installing the wheel, you will need to:

- Check the fork-wheel alignment by fully compressing the fork a few times. The wheel should not make contact with, or come close to any portion of the fork.
- Lift the front of the bicycle, and spin the wheel a few times to verify correct alignment and spacing with the disk brake or the V-Brake brake pads. Check the owner's manual of the brake system for the proper specifications.

3.4.2 Wheel installation on ø32 fork with a 20 mm diameter through-hole axle

4X	DIRT JUMPER	DJ COMP	Z1

For optimum fork performance, please follow the instructions below when installing the wheel:

- Place the wheel in between each fork.
- Align the center of the wheel with each wheel axle clamp (see 3A of Picture 3).
- Insert the axle through the wheel axle clamp of the right fork, through the wheel, and through the wheel axle clamp of the left fork (see 3A of Picture 3).
- Tighten the axle to the required torque (15±1 Nm) using a 6 mm Allen key to the axle caps (see 3B of Picture 3).
- Check for the proper fork-wheel alignment. To do this, begin by fully compressing the fork a few times. The wheel should not make contact with, or come close to any portion of the fork. Then lift the front of the bicycle and spin the wheel a few times to verify the correct alignment with the disk brake. The wheel should not wobble from side to side or up and down. Check the owner's manual of the brake system for the proper specifications.
- Tighten the screw positioned on each wheel axle clamp to the required torque (6±1 Nm) using a 4 mm Allen key (see 3C of Picture 3).

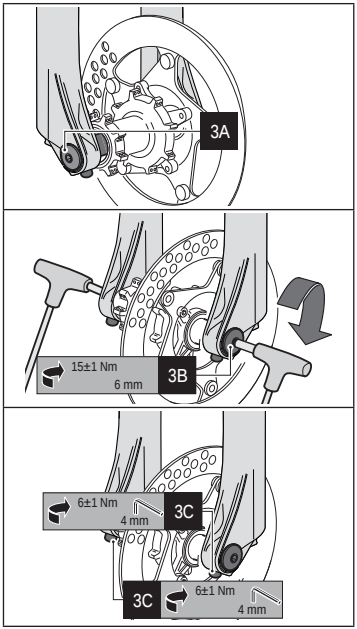

Picture 3 - *Wheel install on ø32 fork with a 20mm diameter through-hole axle*

3.4.3 Wheel installation on ø35/ø38 forks with a 20 mm diameter through-hole axle

888

For optimum fork performance, please follow the instructions below when installing the wheel:

- Place the wheel in between each fork.
- Align the center of the wheel with each wheel axle clamp (see 4A of Picture 4).
- Insert the axle through the wheel axle clamp of the right fork, through the wheel, and then screw it into the wheel axle clamp of the left fork (see 4A of Picture 4).
- Tighten the axle to the required torque (15±1 Nm) using a 6mm Allen key to the caps of the axle (see 4B of Picture 4).
- Check for the proper fork-wheel alignment. To do this, begin by fully compressing the fork a few times. The wheel should not make contact with, or come close to any portion of the fork. Then lift the front of the bicycle and spin the wheel a few times to verify the correct alignment with the disk brake. The wheel should not wobble from side to side or up and down. Check the owner's manual of the brake system for the proper specifications.
- Tighten the screws positioned on each wheel axle clamp to the required torque (6±1 Nm), with a "1-2-1" sequence, using a 4mm Allen key (see 4C of Picture 4).

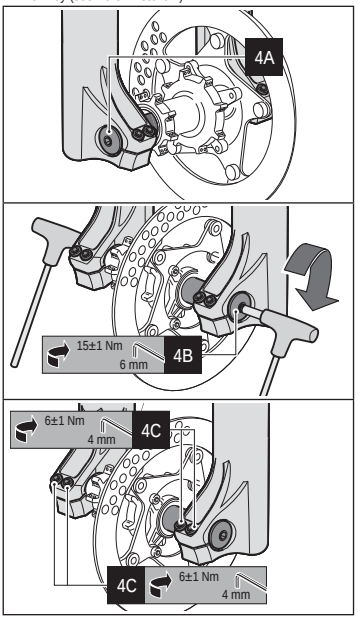

Picture 4 - *Wheel install on ø35/ø38 forks with a 20 mm diameter through hole axle*

3.4.4 Wheel installation on a fork with QR20 quick release axle

55	66

WARNING!

Always check the cleanness of the fork dropouts and remove the possible dirt and mud before installing the wheel. Dirt can compromise the correct functioning of the axle and the fastening safety. An incorrect wheelfastening can cause serious accidents, even fatal ones. Do not tighten the axle without having put the hub between the fork dropouts first. Do not ever use other tools during the tightening of the wheel axle. An excessive tightening can damage the axle and the fork.

The wheel-axle of the QR20 system allows, in a very quick way and without the use of tools, assembling and disassembling the front wheel in the fork.

The wheel locking procedure is as simple as QR for standard wheels with 9mm axle with eccentric lever. The installation procedure is very similar as well.

For optimum fork performance, please follow the instructions below when installing the wheel:

- Place the wheel hub between the two fork dropouts.
- Align the wheel hub on the fork dropouts (see 5A of Picture 5).
- Install the axle through the right wheel axle dropout. (see 5A of Picture 5).
- Pass through the hole in the centre of the hub until it stops against the left wheel axle dropout.

The quick release lever, fully opened, allows the axle screwing and unscrewing on the left wheel axle dropout.

- Keep the quick release lever fully opened and rotate the axle clockwise (see 5B of Picture 5) till resistance to the screwing is perceived.
- Close the lever slightly in order to position it in the direction desired for the closing.
- By means of the quick release lever installed in the end of the axle, lock the lever (see 5C of Picture 5); this way, the wheel will be correctly fastened to the fork.

The lever must cause resistance during the rotation for the closing in order to have a correct fastening. When the closing is finished, a slight mark of the lever can be noticed on one's hand.

Open the quick release lever in order to increase tension and screw futher on the axle, rotating clockwise, till the correct tension during the closing is felt.

If the lever does not manage to rotate completely till the closing position, it means that the axle has been screwed on the fork dropout too much. In this case tension must be reduced, to do this screw the axle slightly, rotating it anticlockwise, till the correct tension during the closing is felt.

- Check that the release lever is in a position that assures the correct fastening of the axle, and that it is in a position that it is not subject to collisions during the use (see 5C of Picture 5).
- Check for the proper fork-wheel alignment. To do this, begin by fully compressing the fork a few times. The wheel should not make contact with, or come close to any portion of the fork. Then lift the front of the bicycle and spin the wheel a few times to verify the correct alignment with the disk brake. The wheel should not wobble from side to side or up and down. Check the owner's manual of the brake system for the proper specifications.

Do not rotate or change the lever position after having closed the quick release lever. The shift of the fastening lever can compromise the wheel fastening safety causing the axle loosening.

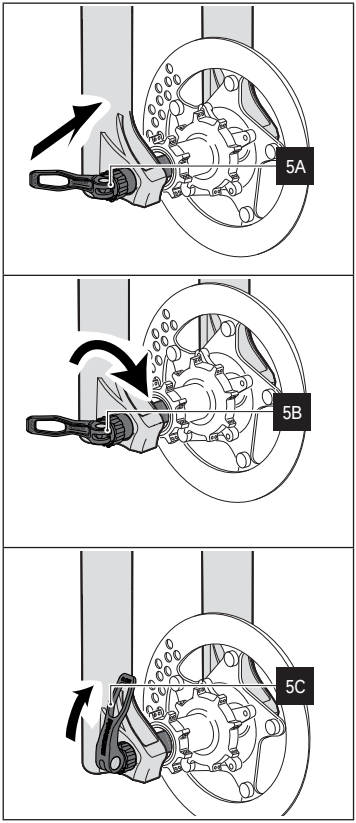

Picture 5 - *Wheel installation on a fork with QR20 quick release axle*

3.4.5 Wheel installation on a fork with QR15 quick release axle

44	44 29"

The QR15 wheel axle system allows assembling and disassembling the front wheel in the fork in an extremely quick way and without the use of tools.

The wheel locking procedure is as simple as the QR for standard wheels with a 9mm axle.

For optimum fork performance, please follow the instructions below when installing the wheel:

- Place the wheel in between each fork.
- Align the centre of the wheel between the two wheel axle clamps (see 6A of Picture 6).
- Introduce the axle through the right wheel axle clamp.
- Pass through the hole in the centre of the hub until it stops against the tightening nut of the axle that is installed in the left wheel axle clamp.
- By keeping the locking lever in parallel direction to the axis, screw the axle in the nut or the nut in the axle (see 6B of Picture 6) without distinction. During the screwing operation, do not use the axle locking lever to increase the tightening torque.
- By means of the check lever installed in the end of the axle, lock the lever (see 6C of Picture 6); this way, the wheel will be correctly fastened to the fork.
- Check that the release lever is in a position that assures the correct fastening of the axle, and that it is in a position that it is not subject to collisions during the use (see 6C of Picture 6).
- Check for the proper fork-wheel alignment. To do this, begin by fully compressing the fork a few times. The wheel should not make contact with, or come close to any portion of the fork. Then lift the front of the bicycle and spin the wheel a few times to verify the correct alignment with the disk brake. The wheel should not wobble from side to side or up and down. Check the owner's manual of the brake system for the proper specifications.

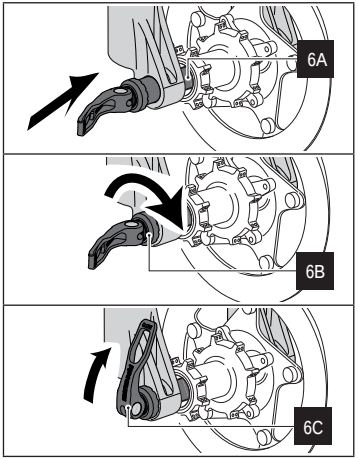

Picture 6 - *Wheel installation on a fork with QR15 quick release axle*

3.5 Fender installation

888 RV

The fender may be provided with the fork, or purchased separately.

To install the fender, first insert the support bushing between the screw and fender (see 7A of Picture 7). Tighten the screw to the required torque (6±1 Nm) using a 8mm spanner (see 7B of Picture 7).

WARNING!

When the fender is assembled on a 888 fork, the position of the superior part of the crown must be in corrispondence to max line on the stanchion.

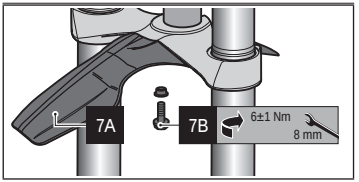

Picture 7 - *Fender installation*

3.6 Handlebar clamp installing on all Dual Crown models

888

To install the handlebar clamp, please carefully follow the instructions below:

- Place the lower mounting segment of the handlebar clamp on the upper crown of the fork (see 8A & 8B of Picture 8).
- Align the corresponding holes from each of these components.
- Secure the lower mounting segment of the handlebar clamp to the upper crown of the fork by tightening the screws to the required torque (6±1 Nm) using a 4mm Allen key (see 8C of Picture 8).
- Place the handlebar into the lower mounting segment of the handlebar clamp, being sure that it is centered (see 8D of Picture 8).
- Place each upper segment of the handlebar clamp over the handlebar (see 8E of Picture 8).
- Align the holes of the upper segment with the corresponding holes of the lower mounting segment.
- Secure the handlebar in place by tightening each screw to the required torque (6±1 Nm) using a 4mm Allen key (see 8F of Picture 8).

For installation of handlebars having different diameters, "reduction sleeves" may be placed around the handlebar (between the handlebar and each segment of the handlebar clamp) to ensure the handlebar is held in place (see 8G of Picture 8).

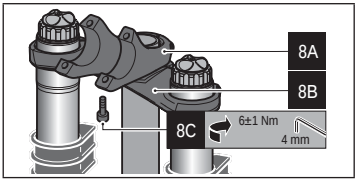

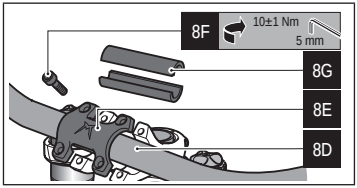

Picture 8 - *Handlebar clamp installation*

4. SUMMARIZING TABLES

Model	Elastic system					Hydraulic system												
	Coil preload with mechanical adjuster	Coil preload with air	Air Preload	AER	VA	TST MICRO	TST2	LR Damper	RLO	LO	RC3 EVO	RC3	IRA	RV	CV	R Cartridge	R Damper	Fixed Damping
CORSA SUPERLEGGERA				RH		LH												
CORSA SUPERLEGGERA LR				LH				RH										
MARATHON LR				LH				RH										
MARATHON R				LH													RH	
44 MICRO TI				RH	RH	LH												
44 RC3 TITANIUM			RH									RH						
44 TST2 AIR			LH				RH											
44 TST2 COIL		LH					RH											
44 RLO			LH						RH									
44 MICRO TI 29"			RH		RH	LH												
44 TST2 29"			LH				RH											
22 RLO	LH								RH									
TXC LO			RH							LH			RH					
TXC 1			X2										RH					
TXC 2	LH		RH										RH					
55 MICRO TI				RH	RH	LH												
55 RC3 TITANIUM	LH		RH									RH						
55 TST2 AIR			LH				RH											
55 TST2 COIL		LH					RH											
55 RV	X2													LH				
55 RS		RH												LH				
4X RC3			RH									RH						
DIRT JUMPER 1		RH												RH				
DIRT JUMPER 2		RH												RH				
DIRT JUMPER 3	RH																	LH
DJ COMP	LH																	
66 RC3 EVO TITANIUM	RH		LH								LH							
66 RC3 EVO	RH		LH								LH							
66 RCV	RH		LH											LH	RH			
888 RC3 EVO TITANIUM	RH				LH						LH							
888 RC3 EVO	RH				LH						LH							
888 RCV	RH		LH											LH	RH			
888 RV														LH				
Z1 SPORT		RH														LH		

Table 5 - *Forks adjustments*

X2	Adjustment on both legs
RH	Adjustment on right leg
LH	Adjustment on left leg

Table 6 - *Key to table*

NOTE

Air pressure values will vary depending on the rider, terrain, preferred travel position and personal preferences. Therefore the data provided by this chart are purely indicative and have to be considered as a quick set-up guide for your first settings and may vary after riding the bicycle. Use a low-pressure pump (Code: 4208/C) or a high-pressure pump (Code: 4209/C) for calibration. For all calibrations lower than 7 bars (100 psi), a low-pressure pump is recommended, as it guarantees a more exact setting. In forks with mechanical spring preload, it is advisable to adjust the mechanical regulation before increasing the working pressure. In air forks, at pressures lower than those recommended, the fork free length might be shorter than the declared one.

NOTE

Click on www.marzocchi.com Technical Area if you need to know the list of alternative springs, upgrade kit and travel change kit.

NOTE

In CORSA, MARATHON, 44 Micro TI, 44 TST2 Air, 44 RLO, 44 Micro Ti 29" and 44 TST2 29" you can change the fork travel with specific spacers which can be installed on fork, supplied in the box or sold separately.

WARNING!

The installation of the travel change kit, upgrade kit and springs kit must be followed by a Marzocchi Authorized Service Centre.

Air fork	Adjustment side	Air pressure - Rider's weight					
		55 ÷ 65 Kg 121 ÷ 143 lbs	65 ÷ 85 Kg 143 ÷ 187 lbs	85 ÷ 105 Kg 187 ÷ 232 lbs	55 ÷ 65 Kg 121 ÷ 143 lbs	65 ÷ 85 Kg 143 ÷ 187 lbs	85 ÷ 105 Kg 187 ÷ 232 lbs
		bar			psi		
CORSA SUPERLEGGERA	RH	5,5	6,5	7,5	80	94	109
CORSA SUPERLEGGERA LR	LH	5,5	6,5	7,5	80	94	109
MARATHON LR	LH	5,5	6,5	7,5	80	94	109
MARATHON R	LH	5,5	6,5	7,5	80	94	109
44 MICRO TI	RH	5,0	6,0	7,0	73	87	102
44 TST2 AIR	LH	3,0	3,5	4,0	44	51	58
44 RLO	LH	3,0	4,0	5,0	44	58	73
44 MICRO TI 29"	RH	3,0	4,0	5,0	44	58	73
44 TST2 29"	LH	3,0	3,5	4,0	44	51	58
55 MICRO TI	RH	5,0	6,0	7,0	73	87	102
55 TST2 AIR	LH	2,5	3,0	3,5	36	44	51
4X RC3	RH	4,0	5,0	6,0	58	73	87

Spring fork	Adjustment side	Air pressure - Rider's weight					
		55 ÷ 65 Kg 121 ÷ 143 lbs	65 ÷ 85 Kg 143 ÷ 187 lbs	85 ÷ 105 Kg 187 ÷ 232 lbs	55 ÷ 65 Kg 121 ÷ 143 lbs	65 ÷ 85 Kg 143 ÷ 187 lbs	85 ÷ 105 Kg 187 ÷ 232 lbs
		bar			psi		
44 RC3 TITANIUM	RH	0	0,5	1,0	0	7	15
44 TST2 COIL	LH	0	0,5	1,0	0	7	15
55 RC3 TITANIUM	RH	1,0	1,5	2,0	15	22	29
55 TST2 COIL	LH	0	0,5	1,0	0	7	15
55 RS	RH	0,5	1,0	1,5	7	15	22
DIRT JUMPER 1	RH	0	0,5	1,0	0	7	15
DIRT JUMPER 2	RH	0	0,5	1,0	0	7	15
66 RC3 EVO TITANIUM	LH	0	0,5	1,0	0	7	15
66 RC3 EVO	LH	0	0,5	1,0	0	7	15
66 RCV	LH	0	0,5	1,0	0	7	15
888 RCV	LH	0	0,5	1,0	0	7	15

Table 7 - *Recommended air pressure values*

WARNING!

The operations listed below accompanied by this symbol should only be performed by authorized MARZOCCHI service centers.

General maintenance operation	Use	
	Intense	Normal
Check that screws are tightened to required torque	Before every ride	
Stanchions cleaning	After every ride	
Air pressure control	Before every ride	10 hours
Cleaning and lubrication of sealing rings	Before every ride	Every two ride
Oil seals control	25 hours	50 hours
Oil change	50 hours	100 hours
Cartridge oil replacement	25 hours	50 hours
Fork oil seals cartridge replacement	50 hours	100 hours

Table 8 - *Periodic maintenance table*

Part to be tightened	Tightening torque (Nm)
V-brake locking pins	9 ± 1
Fork's top caps	10 ± 1
Adjuster locking screws	2 ± 0,5
Pumping rod / cartridge foot nuts	10 ± 1
Pumping rod foot screws	10 ± 1
Fender fixing screws (888 RV)	6 ± 1
Handlebar clamp fixing screws (888)	6 ± 1
Lower crown fixing screws (888)	6 ± 1
Lower crown fixing screws (888)	6 ± 1
Wheel axle screws	15 ± 1
Allen screws for wheel axles	6 ± 1

Table 9 - *Tightening torques*

5 WARRANTY

5.1 Warranty For EU Countries

Subject to the terms and conditions set forth herein, Tenneco Marzocchi S.r.l. grants an independent warranty to the relevant end-user that its suspension system is free from defect in material and/or workmanship throughout a period of two (2) years from the date of the purchase. A defective suspension system will be repaired or replaced, at the option of Tenneco Marzocchi S.r.l. free of charge, within thirty (30) days after receipt of the same from the relevant authorized Tenneco Marzocchi dealer. The retail invoice or, if any, the warranty certificate dated and stamped by the relevant Marzocchi retailer, enclosed with the product, will serve to prove the commencement date of the warranty and the place of purchase of the product. In the event of a defect within the aforesaid term, the purchaser should return the product to the Marzocchi retailer where he/she bought it, illustrating the defect and the reasons of the warranty claim. The retailer will inform the purchaser when the product has been repaired or replaced.

5.1.1.1 NOT COVERED: This warranty does not cover defects resulting from accidents, alteration, neglect, misuse, abuse, improper use, improper assembly, improper maintenance, repairs improperly performed, replacement parts or accessories not conforming to Tenneco Marzocchi S.r.l.'s specifications, modifications not recommended or approved in writing by Tenneco Marzocchi S.r.l. activities such as acrobatics, stunt jumping, ramp riding, racing, commercial use, competitive use, use in mountain biking or BMX parks, use on BMX trails, and/or normal wear or deterioration occasioned by the use of the suspension system, and, in general, all subsequent non- conformity defects resulting from the non observance of the instructions of the products Manual.

This warranty does not cover, as they are not original non-conformities, items and substances subject to normal wear occasioned by use, such as oil, sealing rings, dust seals, and sliding bushes. In addition, this warranty is void in the event that the suspension system is used with rental bicycles. This warranty will be automatically void if the serial number of the Marzocchi suspension system is altered, erased, defaced or otherwise subject to any tampering. Finally, this warranty will not cover second-hand Marzocchi suspension systems and in this case the retailer will offer a warranty for the second-hand product, without liability of any kind, either direct or indirect, of Tenneco Marzocchi S.r.l.

5.1.1.2 TERRITORIAL LIMITATION: This warranty covers all the products bought only in a EU country (including Switzerland), except for products bought in a EU country but used in the USA which the clauses of the "Warranty rest of the world – USA included" apply to. Some EU countries set mandatory rules which govern the warranty for consumer goods; should these rules be inconsistent with the terms of this warranty, national mandatory rules shall take precedence.

WARNING!

Install, service and use the Marzocchi Suspension System in absolute compliance with the instructions in the products Manual.

5.1.2 PURCHASER: This warranty is made by Tenneco Marzocchi S.r.l. with only the original purchaser of the Marzocchi suspension system, and does not extend to any third parties. The rights of the original purchaser under this warranty may not be assigned.

5.1.3 TERM: The term of this warranty shall commence on the date of purchase and shall continue for a period of two (2) years from the date of the original purchase. Unless the two-year warranty still applies, replaced parts have an additional six (6) month warranty.

5.1.4 PROCEDURE: In the event of a defect covered by this warranty, the purchaser should exclusively contact the authorized Tenneco Marzocchi dealer, from whom the purchaser bought the product (or Tenneco Marzocchi USA).

5.1.5 ADDITIONAL REMEDIES: The warranty granted hereunder shall be respective of and in addition to any statutory warranty claim an end-user may have against its relevant dealer where the end-user has purchased the suspension system or any mandatory product liability rights.

5.1.6 DAMAGES: This independent warranty shall not give any rights for compensation of damages but shall be limited to the remedies set forth in Section 5.1 above. Specifically, Tenneco Marzocchi S.r.l. and Tenneco Marzocchi USA, Inc. SHALL NOT BE RESPONSIBLE UNDER THIS WARRANTY FOR ANY INCIDENTAL OR CONSEQUENTIAL DAMAGES ASSOCIATED WITH THE USE OF THE MARZOCCHI SUSPENSION SYSTEM.

5.1.7 WARNING: Always install, repair and use your Marzocchi suspension system in strict compliance with its owner's manual.

5.1.8 EUROPEAN WARRANTY APPLICABLE LAW: Any disputes arising out of this warranty will be governed by the laws of the country of Italy.

5.2 Warranty rest of the world excluding Europe – USA included

If any component of your suspension system is found to be defective in materials or workmanship within the term of this Limited Two Year Warranty (the "Agreement"), the defective component will be repaired or replaced, at the option of Tenneco Marzocchi S.r.l. free of charge, within thirty (30) days after receipt of the same from an authorized Tenneco Marzocchi dealer or Tenneco Marzocchi USA, freight prepaid, together with the original retail invoice or other evidence of the date of purchase.

5.2.1 NOT COVERED: This warranty does not cover damage resulting from accidents, alteration, neglect, misuse, abuse, improper use, lack of reasonable or proper maintenance, improper assembly, repairs improperly performed, replacement parts or accessories not conforming to Tenneco Marzocchi S.r.l.'s specifications in the Owner's Manual or on the Website www.marzocchi.com, modifications not recommended or approved in writing by Tenneco Marzocchi S.r.l. activities such as acrobatics, jumping, stunt riding, ramp riding, racing, commercial use, competitive use, use in mountain biking or BMX parks, use on BMX trails, and/or normal wear or deterioration occasioned by the use of the suspension system. This warranty does not cover items subject to normal wear due to the use of the suspension system, such as for example oil, oil seals, dust seals and bushes. We therefore ask you to check (or have your dealer check) its condition at the moment you purchase the suspension system, as that is the only time that it will be possible to replace such components. In addition, this warranty is void in the event that the suspension system is used with rental bicycles, unless Tenneco Marzocchi S.r.l. provided prior approval in writing for such use. This warranty also does not include any expenses related to the transportation of the Marzocchi suspension system to or from an authorized Tenneco Marzocchi dealer (or Tenneco Marzocchi USA), labor costs to remove the Marzocchi suspension system from the bicycle, or compensation for loss of use while the Marzocchi suspension system is being repaired. This warranty will be automatically void if the serial number of the Marzocchi suspension system is altered, erased, defaced or otherwise subject to any tampering. This warranty will be automatically void if the purchaser does not follow all the instructions in the Owner's Manual and in the website www.marzocchi.com.

⚠ WARNING!

Install, service and use the Marzocchi Suspension System in absolute compliance with the instructions in the products Manual.

5.2.2 PURCHASER: This warranty is made by Tenneco Marzocchi S.r.l. with only the original purchaser of the Marzocchi suspension system, and does not extend to any third parties. The rights of the original purchaser under this warranty may not be assigned.

5.2.3 TERM: The term of this warranty shall commence on the date of purchase and shall continue for a period of two (2) years from the date of the original purchase. Unless the two-year warranty still applies, replaced parts have an additional six (6) month warranty.

5.2.4 PROCEDURE: In the event of a defect covered by this warranty, the purchaser should contact an authorized Tenneco Marzocchi dealer (or Tenneco Marzocchi USA).

5.2.5 ENTIRE AGREEMENT: This warranty supersedes any and all oral or express warranties, statements or undertakings that may previously have been made, and contains the entire agreement between the parties with respect to the warranty of this Marzocchi suspension system. Any and all warranties not contained in this warranty are expressly and specifically excluded.

5.2.6 LIMITED WARRANTY: Except as expressly provided by this warranty, Tenneco Marzocchi S.r.l. and Tenneco Marzocchi USA, Inc. SHALL NOT BE RESPONSIBLE FOR ANY INCIDENTAL OR CONSEQUENTIAL DAMAGES ASSOCIATED WITH THE USE OF THE MARZOCCHI SUSPENSION SYSTEM OR A CLAIM UNDER THIS AGREEMENT, WHETHER THE CLAIM IS BASED ON CONTRACT, TORT OR OTHERWISE. The foregoing statements of warranty are exclusive and lieu of all other remedies. Some states do not allow the exclusion or limitation of incidental or consequential damages, so this limitation or exclusion may not apply to you.

5.2.7 DISCLAIMER: ANY IMPLIED WARRANTY OF MERCHANTABILITY OR FITNESS FOR A PARTICULAR PURPOSE AND ALL IMPLIED WARRANTIES ARISING FROM A COURSE OF DEALING, USAGE OR TRADE, BY STATUTE OR OTHERWISE, IS HEREBY STRICTLY LIMITED TO THE TERM OF THIS WRITTEN WARRANTY. This Agreement shall be the sole and exclusive remedy available to the Purchaser with respect to this purchase. In the event of any alleged breach of any warranty or any legal action brought by the purchaser based on alleged negligence or other tortuous conduct by Tenneco Marzocchi S.r.l. the Purchaser's sole and exclusive remedy will be repair or replacement of the defective materials, as stated above. No dealer and no other agent or employee of Tenneco Marzocchi S.r.l. is authorized to modify, extend or enlarge this warranty.

5.2.8 WARNING: Always install, repair and use your Marzocchi suspension system in strict compliance with its owner's manual.

5.2.9 OTHER RIGHTS: This warranty gives you specific legal rights, and you may also have rights that may vary from state-to-state.

5.2.10 APPLICABLE LAW IN THE REST OF THE WORLD: Any disputes arising out of this Agreement or caused by the use of the Marzocchi suspension system will be governed by the laws of the State of California, and will be exclusively decided by the Courts of Bologna, Italy.

MARZOCCHI

04 - 2010 - Ed. 00.00

9001387 FORK MANUAL