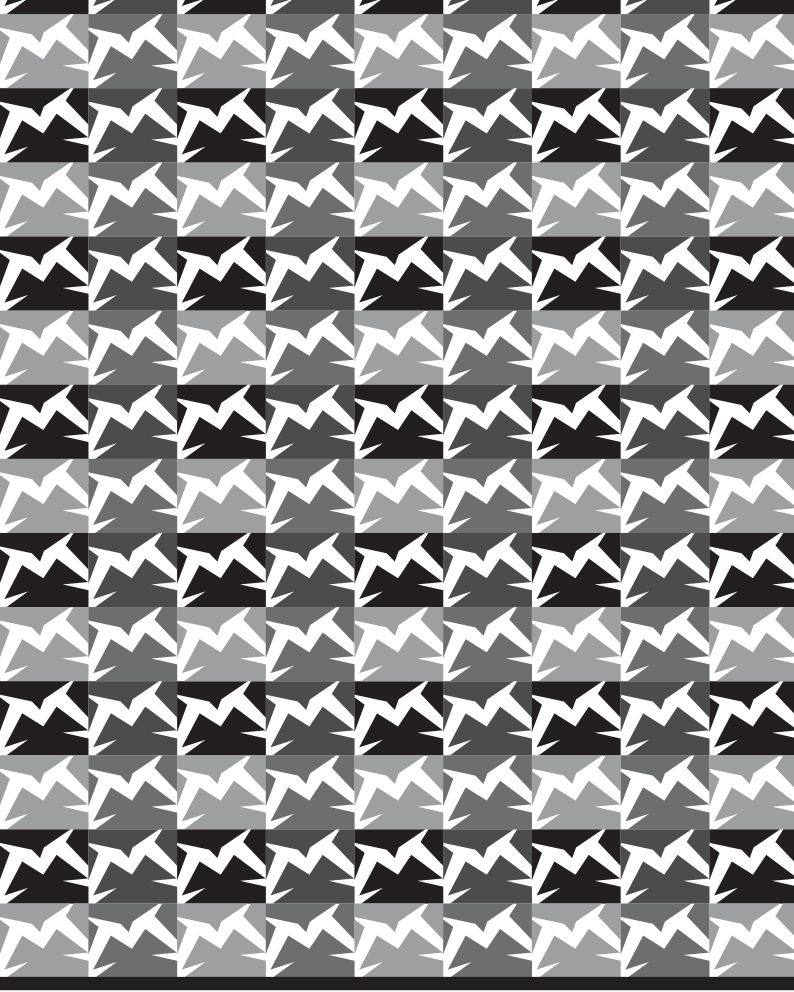

BOMBER SUSPENSION OWNER'S MANUAL 2009

WARNING!

Per la versione completa del manuale d'uso riferirsi al sito www.marzocchi.com

You can download the complete version of the 2009 owner manual from internet at www.marzocchi.com

SUMMARY

	EN
GENERAL WARNING	3
OWNER MANUAL	4

INTENDED USE CHART

	TREKKING / CROSS COUNTRY	CROSS COUNTRY / ALL MOUNTAIN	ALL MOUNTAIN / FREERIDE	4X / DIRT JUMPER	EXTREME FREERIDE / DOWNHILL
	WARNING USE ONLY FOR: • TREKKING / CROSS COUNTRY DO NOT USE FOR: • ALL MOUNTAIN / FREERIDE • 4X / DIRT JUMPER • DOWNHILL / EXTREME FREERIDE Misuse or abuse of these forks can result in fork failure, an accident, serious injury or death FOR PROPER USE INSTRUCTIONS SEE OWNERS MANUAL OR WWW.MARZOCCHI.COM PER CORRETTO UTILIZZO RIFERIRSI AL MANUALE D'USO O AL SITO WWW.MARZOCCHI.COM POUR UNE UTILISATION CORRECTE , VEUILLEZ VOUS RÉFÉRER AU MANUEL OU SUR LE SITE WWW.MARZOCCHI.COM FÜR HINWEISE ZUM RICHTIGEN EINSATZ DER PRODUKTE LESEN SIE BITTE DIE BEDIENUNGSANLEITUNG ODER SCHAUEN SIE UNTER WWW. MARZOCCHI.COM SIGA LAS INSTRUCCIONES CORRECTAS EN EL MANUAL DE USUARIO O EN WWW.MARZOCCHI.COM	WARNING USE ONLY FOR: • CROSS COUNTRY / ALL MOUNTAIN DO NOT USE FOR: • FREERIDE • 4X / DIRT JUMPER • DOWNHILL / EXTREME FREERIDE Misuse or abuse of these forks can result in fork failure, an accident, serious injury or death FOR PROPER USE INSTRUCTIONS SEE OWNERS MANUAL OR WWW.MARZOCCHI.COM PER CORRETTO UTILIZZO RIFERIRSI AL MANUALE D'USO O AL SITO WWW.MARZOCCHI.COM POUR UNE UTILISATION CORRECTE , VEUILLEZ VOUS RÉFÉRER AU MANUEL OU SUR LE SITE WWW.MARZOCCHI.COM FÜR HINWEISE ZUM RICHTIGEN EINSATZ DER PRODUKTE LESEN SIE BITTE DIE BEDIENUNGSANLEITUNG ODER SCHAUEN SIE UNTER WWW. MARZOCCHI.COM SIGA LAS INSTRUCCIONES CORRECTAS EN EL MANUAL DE USUARIO O EN WWW.MARZOCCHI.COM	WARNING USE ONLY FOR: • ALL MOUNTAIN / FREERIDE DO NOT USE FOR: • 4X / DIRT JUMPER • DOWNHILL / EXTREME FREERIDE Misuse or abuse of these forks can result in fork failure, an accident, serious injury or death FOR PROPER USE INSTRUCTIONS SEE OWNERS MANUAL OR WWW.MARZOCCHI.COM PER CORRETTO UTILIZZO RIFERIRSI AL MANUALE D'USO O AL SITO WWW.MARZOCCHI.COM POUR UNE UTILISATION CORRECTE , VEUILLEZ VOUS RÉFÉRER AU MANUEL OU SUR LE SITE WWW.MARZOCCHI.COM FÜR HINWEISE ZUM RICHTIGEN EINSATZ DER PRODUKTE LESEN SIE BITTE DIE BEDIENUNGSANLEITUNG ODER SCHAUEN SIE UNTER WWW. MARZOCCHI.COM SIGA LAS INSTRUCCIONES CORRECTAS EN EL MANUAL DE USUARIO O EN WWW.MARZOCCHI.COM	WARNING USE ONLY FOR: • 4X / DIRT JUMPER DO NOT USE FOR: • ALL MOUNTAIN / FREERIDE • DOWNHILL / EXTREME FREERIDE Misuse or abuse of these forks can result in fork failure, an accident, serious injury or death FOR PROPER USE INSTRUCTIONS SEE OWNERS MANUAL OR WWW.MARZOCCHI.COM PER CORRETTO UTILIZZO RIFERIRSI AL MANUALE D'USO O AL SITO WWW.MARZOCCHI.COM POUR UNE UTILISATION CORRECTE , VEUILLEZ VOUS RÉFÉRER AU MANUEL OU SUR LE SITE WWW.MARZOCCHI.COM FÜR HINWEISE ZUM RICHTIGEN EINSATZ DER PRODUKTE LESEN SIE BITTE DIE BEDIENUNGSANLEITUNG ODER SCHAUEN SIE UNTER WWW. MARZOCCHI.COM SIGA LAS INSTRUCCIONES CORRECTAS EN EL MANUAL DE USUARIO O EN WWW.MARZOCCHI.COM	
TXC	•				
CORSA	•				
MARATHON CORSA	•				
44		•			
33		•			
22	•				
55			•		
4X				•	
DIRT JUMPER				•	
66					•
888					•

Table 1 - *Intended use chart*

ENGLISH

I. USE OF THIS MANUAL

I.I General warnings

WARNING!

Descriptions preceded by this symbol contain information, instructions, or procedures, which, if not followed, can result in damage or malfunction of the suspension, environmental damages, accidents, personal injury or death.

REMEMBER

Descriptions preceded by this symbol contain information, or procedures recommended by MARZOCCHI for optimum use of the suspension.

WARNING!

Failure to follow the warnings and instructions could result in malfunction, accidents, personal injury or death.

WARNING!

Failure to properly match the suspensions to your frame could cause malfunction of the suspension, resulting in a loss of control of the bicycle, and possible serious injury or death to the rider.

Please note that throughout this manual, reference is made that "accidents" could occur. Any accident could result in loss of bicycle control, damage to your bicycle or its components, and more importantly, cause you or a bystander to sustain severe personal injury or death.

Please be advised that suspension system installation, service and repair tasks require specialized knowledge, tools and experience. General mechanical aptitude may not be sufficient to properly install, service or repair your suspension system. Installation and maintenance of the suspension system must be carried out only by an authorized Marzocchi Service Center. Improper installation, service or repair may lead to accidents, resulting in personal injury or death.

For further information, please consult the www.marzocchi.com web site or contact your nearest Marzocchi Service Center. A list of service centers can be found on our web site.

I.II General safety recommendations

Never make any modifications whatsoever to any component of the suspension system. The components of the Marzocchi suspension system are designed as a single integrated system. To avoid compromises in terms of safety, performance, durability and function, use only original Marzocchi components for substitution.

It is necessary to learn how to ride your bike without going beyond your personal capabilities. Always use the proper safety equipment, and ensure that all your riding equipment is in excellent condition.

Damage to your suspension can occur if your bicycle strikes any overhead object, such as garages, bridges, tree limbs or other obstacles, while attached to a bicycle carrier, at any speed.

Always check your suspension and if there are deformations, cracks, impact marks, stress marks or bent parts, no matter how slight, it is necessary to have the suspension checked by an authorized Marzocchi Service Center.

The suspension system will show signs of wear and tear through time. Have your bike periodically checked for oil leaks, cracks, chips or other signs of wear and tear by an authorized Marzocchi Service Center.

The frequency of inspection depends on many factors; check with your Authorized Marzocchi Representative to select a schedule that is best for you.

When using a bicycle carrier (car roof rack or rear-hitch mount), be sure to fully loosen the quick release fastener on the carrier when mounting or removing your bicycle. Additionally, be sure to always keep your bicycle in a vertical position when mounting or removing your bicycle to and from the bicycle carrier. Failure to fully loosen the quick release fastener, or any bending action while mounting or removing your bicycle to and from the carrier, could result in scratching, bending, or cause other damages your suspension system.

Learn and follow the local bicycle laws and regulations, and obey all traffic signals, signs and laws while you ride.

Always wear a properly fitted and fastened bicycle helmet that has been approved by ANSI, SNELL or CE, and any other safety equipment necessary for your riding style.

When riding in wet conditions, remember that the stopping power of your brakes is greatly reduced and that the adherence of the tires on the ground is considerably reduced. This makes it harder to control and stop your bicycle. Extra care is required when riding your bicycle in wet conditions to avoid an accident.

Avoid riding at night because it is more difficult for you to be seen by traffic, and it is more difficult for you to see obstructions on the ground. If you do ride at night, or in conditions of poor visibility, equip your bicycle with and use a headlight and a taillight. Wear clothes that are snug-fitting and that make you visible to traffic, such as neon, fluorescent, or other bright colors.

Carefully read and follow all instructions and warnings supplied.

I.III Before every ride

WARNING!

Do not ride your bicycle if it does not pass this pre-ride test.

Check your suspensions for any leaks or other traces of oil, which is indicative of a problem with your suspension. Be sure to turn your bicycle upside down to check areas such as the underside of the crown for evidence of an oil leak.

Be sure that all components of the suspensions and the bicycle, including the brakes, pedals, handgrips, handlebars, frame and seating system, are in optimum condition and suitable for use.

Be sure that none of the components of your suspension system or of the bicycle are bent, deformed or otherwise damaged.

Check that all quick release fasteners, nuts and bolts are properly fastened. Bounce the bicycle on the ground while listening and looking for anything that may be loose.

Be sure that your wheels are perfectly aligned. Spin the wheels to ensure that they do not wobble up and down or from side to side, and that they do not make contact with the suspension legs or brake pads while rotating.

Be sure that all cables and other components of your braking system are in their proper position, properly adjusted and that your braking system is functioning properly.

Be sure that your tires are inflated to the correct pressure and that there is no damage whatsoever in the tread or sidewall of the tire.

Check that all reflectors are clean, straight and securely mounted.

II. INTENDED USE INSTRUCTIONS

II.I Select the correct riding style

Marzocchi suspensions are among the most durable and technologically advanced suspension systems on the market today. However, no suspension can withstand misuse, abuse or improper use that, over a short period of time, can cause your suspensions to fail when you least expect it. It is critical that you select and use the suspension system that is appropriate for your riding style, and that you use it properly.

Select the suspension that is appropriate for your riding style by referring to the table «intended use chart» (Table 1, page 2). Please see your Marzocchi retailer, or contact Marzocchi directly, if you require assistance in selecting the correct suspension.

II.II Identifying your intended use

Trekking/Cross-Country: Riding along hilly trails where some bumps and smaller obstacles, such as rocks, roots, or depressions, may be encountered. Trekking/Cross-Country riding does not include jumps or "drops" (riding off rocks, fallen trees or ledges) from any height. These forks must be used with tires specifically designed for trekking/cross country riding, and disk, rim or linear pull brakes. You should only attach generators and racks, if any, to the designated mounting points provided on the forks.

Cross Country/All Mountain: This riding style is for skilled Cross Country riders, and involves moderately steep slopes and medium sized obstacles. Cross Country/All Mountain forks should be used only with rim or linear pull brakes or with disk brakes, and those frames, wheels and other components specifically designed for this riding style. The brakes must be attached to the designated mounting points provided on the fork. Never make any modification to your fork when attaching any equipment.

All Mountain/Freeride: This riding style is for skilled riders, and involves steep, aggressive slopes, large obstacles, and moderate jumps. Freeride forks should be used only with disk brakes, and those frames, wheels and other components specifically designed for this riding style. The disk brakes must be attached to the designated mounting points provided on the fork. Never make any modification to your fork when attaching any equipment.

4X/Dirt Jumper: This "BMX" or "motocross" style of riding is only for the most skilled riders, and involves jumping from one mound of dirt to another. It also includes riding over and around "urban obstacles" such as man-made, or other concrete, structures, or racing on a track consisting of jumps made from mounds of dirt which the rider must negotiate by jumping or turning at speed. These forks should only be used with disk brakes, and those frames, wheels and other components specifically designed for this riding style. The disk brakes must be attached to the designated mounting points provided on the fork. Never make any modification to your fork when attaching any equipment.

Extreme Freeride/Downhill: This discipline is only for professional or highly skilled riders. It includes relatively high jumps or "drops' and negotiating larger obstacles such as boulders, fallen trees, or holes. These forks should be used only with disk brakes, and those frames, wheels and other components specifically designed for this riding style. The disk brakes must be attached to the designated mounting points provided on the fork. Never make any modification to your fork when attaching other equipment.

⚠ WARNING!

Failure to properly overcome obstacles on the trail, or failure to properly land after a jump or drop, could cause your suspensions to fail, resulting in a loss of bicycle control, serious injury, or death to the rider.

Learn how to properly flow around obstacles on the trail. Hitting obstacles such as rocks, trees or holes straight-on puts forces on your suspension it was not designed to absorb. Landing improperly after a jump or drop also puts forces on your suspension it was not designed to absorb.

You should only perform jumps or drops when a transition, or down ramp, is available to help your bicycle absorb the impact forces generated during the landing by having both wheels smoothly make contact with the transition, or down ramp, at the same time. Any other type of landing is dangerous, as it could result in accidents or damages to the components.

Ensure that the steepness and length of the transition, or down ramp, are suitable for the height from which you jump or drop and that you are skilled enough to perform them.

1. INTRODUCTION

1.1 Conventions

1.1.1 Orientation of the fork

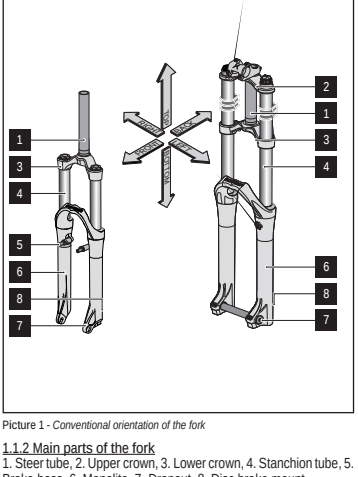

Picture 1 - *Conventional orientation of the fork*

1.1.2 Main parts of the fork

1. Steer tube, 2. Upper crown, 3. Lower crown, 4. Stanchion tube, 5. Brake boss, 6. Monolite, 7. Dropout, 8. Disc brake mount.

2. TECHNICAL INFORMATION

2.1 Spring system

Inside MARZOCCHI forks you will find coil springs, or air, used as suspension mechanism.

2.2 Damping system

The damping load that is generated during compression and rebound of the fork legs can be adjusted by hydraulic valve pumping rods, or by special cartridges.

⚠ WARNING!

NEVER use the compression lock position while riding downhill as the fork will not react properly when hitting obstacles, and can result in a loss of control of the bicycle, an accident, personal injury, or death.

TST MICRO (Terrain Selection Technology With Micro Adjuster)

TST Micro is the greatest evolution of TST closed cartridge hydraulic systems. The black knob installed in the lower part of the fork leg adjusts the rebound. The red-coloured top knob sets Micro System to adjust the compression. The Micro adjustment (golden knob on the top of the fork leg) sets the operating threshold of compression by adapting the behaviour of the suspension system to the type of terrain. Lockout is activated by turning the golden knob completely in the closed position, then shifting the red lever. In some models, the TST system can be operated through the remote control on the handlebar.

TST 5 (5 position Terrain Selection Technology)

The TST5 system uses a sealed cartridge with a rubber bladder. The TST5 cartridge is equipped with a lower black-coloured rebound adjuster and with a top red-coloured compression adjuster. The 5 pre-arranged settings allow a quick and effective compression adjustment; the 5th position of the adjuster "CL" corresponds to lockout. In some models, the lockout of TST5 system can be operated through the remote control in the handlebar.

TST2 (2 position Terrain Selection Technology)

TST 2 is the basic version of the TST systems: the lower black-coloured knob allows adjusting the rebound. The top red-coloured knob sets the lockout, thus assuring a pleasant riding on all terrain . In some models, lockout can be operated through the remote control on the handlebar.

LO (Lock Out)

The LO cartridge adjusts compression damping. The CLOSE position locks the fork out (by keeping a 20 mm stroke), thus making steep climbs easier. In some models, the LO system can be operated through the remote control on the handlebar.

RC3 (3rd Generation Rebound/Compression Cartridge - Open Bath)

It is the leading-edge Open Bath technology by Marzocchi. The RC3 damping system ensures the maximum freedom of adjustment for a free and performing way of riding. The rebound control can be adjusted by means of the black-coloured knob on the fork top. The Position Sensitive Compression system allows automatic bottoming control at high and low speeds by means of the compression adjustment red-coloured knob, which is installed in the lower part of the fork leg.

RV (Rebound Valve - Open Bath)

The RV (Rebound Valve) pumping element is the evolution of the well-proven SSVF Open Bath system. The system controls the rebound speed. If you correctly adjust the black-coloured knob on the lower part of the fork leg, you can keep the wheel on contact with the soil in all riding conditions.

IRA (Internal Rebound Adjuster - open bath)

The IRA (Internal Rebound Adjust) system, which is similar to the RV system, controls the rebound speed and keeps the wheel on contact with the soil in all riding conditions. The Adjuster is installed inside the cartridge and the rebound can be set using the specific adjustment wrench.

R (Rebound Cartridge)

The R cartridge is the Entry Level cartridge to adjust rebound through the black-coloured knob on the fork top.

Fixed Damping

The Fixed Damping cartridge is the simplified version of the R system. The Fixed Damping cartridge allows the hydraulic control of the rebound and is set by Marzocchi.

SFA (Single Function Air)

By means of a single Schrader air valve in the lower part of the fork leg, the SFA pneumatic cartridge allows a perfect and simple adjustment of the pressure in the positive air chamber. The pressure of the negative chamber balances in an automatic way, thus assuring the optimal "initial break" in any condition of use and setting.

ATA (Air Travel Adjust)

The ATA pneumatic cartridge has the functionalities of the SFA system. Easy setting by means of a single air valve installed in the lower part and automatic balancing of the pressure in the negative chamber. In addition, the ATA cartridge, by means of the rotation of the Silver-coloured ATA knob installed on the top of the fork leg, allows adjusting the stroke and the height of the fork in an infinite number of positions within a range of 40 mm. The ATA knob is equipped with a system that prevents accidental stroke variation during the hardest routes.

ATA With PAR (Air Travel Adjust With Progressive Air Resistence)

The ATA pneumatic cartridge with PAR is the new AIR cartridge intended for FR and DH forks.

The ATA system with PAR, by means of the rotation of the Silver-coloured ATA knob installed on top of the fork leg, allows adjusting the stroke and the height of the fork in an infinite number of positions within a range of 40 mm. The ATA knob is equipped with a system that prevents accidental stroke variation during the hardest routes.

By means of the Schrader air valve, which is installed under the ATA knob on top of the fork leg, you can adjust the pressure of the positive air chamber. The negative chamber balances in an automatic way, thus assuring the optimal "initial break" in all conditions of use and setting.

The valve installed in the lower part adjusts the secondary chamber, which allows modifying the progression curve and controlling the limit. Therefore, there is a double pneumatic spring that allows an infinite number of settings to create a compression curve that is the most similar as possible to the coil spring with the additional benefit to be able to modify the setting without really replacing the spring.

CV (Compression Valve - open bath)

The CV pumping element is the evolution of the well-proven SSVF Open Bath systems. The system controls the compression. The red-coloured knob installed in the lower part of the fork leg adjusts the compression.

VA (Volume Adjuster - open bath)

By means of the VA adjuster (installed in the RC3 cartridges for 888), every rider can adjust the air volume inside the fork by simply turning the VA knob. The variation of the volume inside the fork is the same as a virtual modification of oil levels. By simply rotating the adjuster ring you can reduce the air volume, thus achieving an increased progressivity equivalent to an increase in the internal oil volume.

2.3 Lubrication and cooling

The forks can use different lubrication and cooling technologies.

In Open Bath systems, the oil inside the fork leg, besides being a crucial element for the hydraulic operation, accomplishes all cooling and lubrication needs for the internal sliding parts. In addition, if the oil volume is varied within the recommended ranges, it will be an additional setting element, thus allowing the modification of suspension system progressivity. Compared to the systems equipped with sealed cartridges, the Open Bath system allows reducing lubrication operations from outside the stanchion tubes.

The Open Bath system assures an excellent lubrication even from the first "bottoming" of the fork, as well as in all use and weather conditions.

In the systems equipped with sealed cartridge (TST, R, SFA and ATA), the lubrication of the sliding parts is assured by means of the lubricating oil to be found inside the fork leg.

To assure an excellent lubrication, a small quantity of oil is enough; compared to Open Bath systems, it allows weight reduction. The aforesaid lubricant does not work as additional setting element; therefore, the pre-established levels must be carefully observed.

The best lubrication is achieved during the use, when the stress and the bottoming of the fork allow that the oil lifts due to "chattering" from the bottom of the fork leg until reaching and lubricating the bushings.

In the forks that use this system, it is advisable to use an additional lubrication of the oil seals to be carried out according to the established procedures; it allows improving "cold" performances and after inactivity periods.

In entry level models, the internal sliding elements are greased.

2.4 Sliding bushing and oil seals

The guide of the stanchion tubes inside the sliders is formed by two bushings with Teflon® facing, free from static friction.

In the new forks, the notorious smoothness of Bomber models has been overcome thanks to the use of new bushings and seals that are offer a coefficient of friction that is 30% lower, as well as constant performances in time. When the bike is not moving, you can feel a little movement between the fork legs and the sliders: actually, there is a fundamental space to keep the sliding elements always lubricated, and therefore it can be no longer perceived during its use. Indeed, during the use the oil will take up the space between the bushings and the fork legs, thus offering an incomparable smoothness.

At the top end of the monolite, there is a sealing group formed by a special ring with double lip and a dust seal. The sealing group prevents oil leakages, as well as the access of contaminating agents into the lubricant and into the hydraulic cartridges.

3. INSTALLATION

3.1 Installing on the frame

The fork is supplied with an "A-Head Set" steer tube to be cut according to the frame size the fork is being installed on. Installing the fork on the bicycle frame is a delicate and critical operation, and should only be performed by skilled, trained personnel.

WARNING!

Suspension system installation requires specialized knowledge, tools and experience. General mechanical aptitude may not be sufficient to properly install your suspension system. Please have your suspension system installed only by an authorized Marzocchi Suspension Center. Improper installation can result in failure of your Marzocchi Suspension System, an accident, personal injury, or death.

The interference of the cylinder on the base and the play between the cylinder and frame are particularly critical factors for the safety of the operator. For this reason, maintenance and installation must be performed exclusively at authorised technical assistance centres, which have suitable equipment and specific knowledge.

WARNING!

On all dual crown MY 2009 MARZOCCHI models, the lower crown is clamped to the stanchions using bolts. In this case, please be aware of the following precautions during installation.

In case of oversized diameter areas on the stanchions, the crowns clamping can only be done in the shaded area shown in Picture 2A.

In case of reference notches on the stanchions, the lower part of the lower crown must be positioned above the MIN notch and below the MAX notch.

The distance between the inflated tire and the lower part of the lower crown, when the fork is at travel's end, must be at least 4 mm.

On the dual crown forks the maximum length of the steer tube between the two crowns (see Picture 2B) must be smaller than the values (H) shown in Table 1.

NOTE

A protective film to be removed before use protects the stickers.

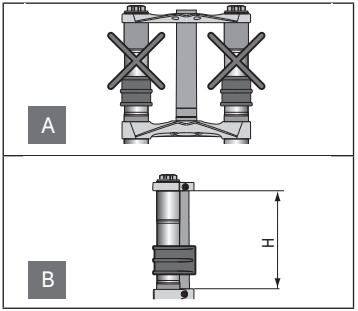

Picture 2 - *Dual crown forks installation on the frame: (2A) Crowns fastening, (2B) Steer tube maximum length between crowns*

Model	Max length between crowns (H)
888 (except 888 RV)	160 mm (180 mm with high top crown (optional))
888 RV	158 mm

Table 1 - *Steer tube maximum length between crowns*

3.2 Installing the brake system

Installing the brake system is a delicate and critical operation that must be carried out by specialized personnel.

WARNING!

Brake system installation requires specialized knowledge, tools and experience. General mechanical aptitude may not be sufficient to properly install your brake system. Please have your brake system installed only by an authorized Marzocchi Service Center. Improper installation of a disk brake system can overstress the caliper mountings, which may cause the caliper mountings to break, resulting in loss of control of the bicycle, an accident, personal injury, or death. Be sure that the brake system installation is also performed in strict compliance with the instructions provided by the brake system manufacturer.

Use only brake systems that comply with the forks specifications, taking into consideration the contents of the summarizing tables contained in this manual.

WARNING!

A special thread-lock treatment is applied to the thread on the bolts (see 2A,2B in Table 2). Bolts that are installed and later removed lose this thread-lock treatment, and therefore can never be used again.

WARNING!

Make sure, before every ride, that the brake cable of the disk brake system is correctly connected to the proper mounting (see 2E, 2F, 2G & 2H in Table 2).

WARNING!

The brake cable must never touch the crown and stanchions.

WARNING!

Before installing a Post Mount braking system, check that the protection film has been removed from the brake caliper.

WARNING!

The fastening screw thread of the disk brake caliper must be screwed by at least 10 mm on the brake support of the fork monolith. Make sure that the fastening screws are not damaged and that they are tightened with a torque spanner according to the specifications of the brake system manufacturer. In any case tighten them by a max. tightening torque of 10 Nm.

V-BRAKE SYSTEM SETTING - REMOVABLE SETTING

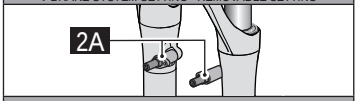

V-BRAKE SYSTEM SETTING - FIXED SETTING

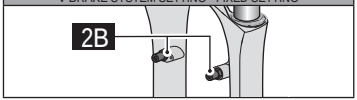

BRAKE DISK SYSTEM SETTING - XC INTL STD

BRAKE DISK SYSTEM SETTING - POST MOUNT

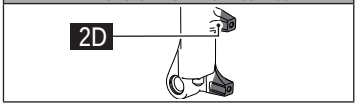

BRAKE DISK SYSTEM SHEATH SUPPORTS SETTING

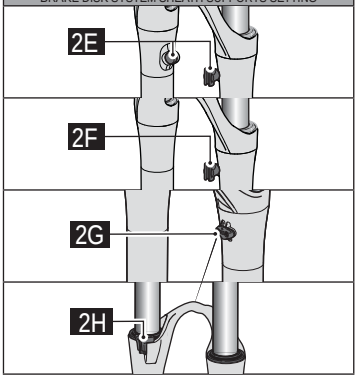

Model	V-Brake System Setting	Brake Disk System Setting	Max disk dimension [1]
TXC	Fixed Setting (see Picture 2B)	XC INTL STD 6" + DRUM brake (see Picture 2C)	6"
MARATHON CORSA LT - 22	Removable Setting (see Picture 2A) [2]	Post Mount 6" (see Picture 2D / 2E)	7"
CORSA - 44 - 33 Drop Out Standard versions (excluding Corsa Cento and 44 ATA Micro)		Post Mount 6" (see Picture 2D / 2E)	8"
CORSA - 44 Drop Out Standard versions (only Corsa Cento and 44 ATA Micro)	NO	Post Mount 6" (see Picture 2D/ 2F)	8"
CORSA - 44 - 33 versions QR15		Post Mount 6" (see Picture 2D / 2G)	8"
4X - 55 - DIRT JUMPER		Post Mount 6" (see Picture 2D / 2G)	8"
66 - 888 (888 RV)		Post Mount 8" (see Picture 2D / 2G)	9"
888		Post Mount 6" (see Picture 2D / 2H)	8"

Table 2 - *Braking system settings*

[1] Installation is only possible when the specific adapter is supplied by the brake system manufacturer. - [2] The V-brake axles are not supplied (accessory code : 850996/C).

3.3 Wheel installation

Model	Max tire dimension
CORSA - MARATHON CORSA - 44 - 33 - 22	2,2" x 26"
4X - 55 - 66 - 888 - DIRT JUMPER	2,8" x 26"
TXC	2,0" x 28"

Table 3 - *Maximum tire dimension*

In the event you need to install wheels with dimensions larger than those specified in Table 3, above, you must verify that:

- The tire turns freely;
- The tire does not make any contact with the brake arch or V-Brake system;
- The distance between the inflated tire and the lower part of the lower crown is at least four (4) mm when the forks' legs are fully compressed.

3.4 Wheel axle securing system

The system for securing the wheel axle to the fork sliders can be standard, which uses the traditional advanced dropouts, or have a 20 mm diameter through-hole axle or with QR quick release axle.

Forks that are created for more intensive use are provided with a wheel fastening system, which originates from the motocross application and uses a 20 mm axle.

The new QR system allows combined hardness and easy installation.

WHEEL AXLE SECURING SYSTEM WITH STANDARD DROPOUTS
CORSA - MARATHON CORSA - 44 - 33 - 22 - DIRT JUMPER - TXC

WHEEL AXLE SECURING SYSTEM WITH 20 MM DIAMETER THROUGH-HOLE AXLE		
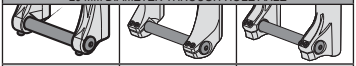		
4X - DIRT JUMPER	888 RV	888 (except 888 RV)

WHEEL AXLE SECURING SYSTEM WITH QR 20 QUICK RELEASE AXLE
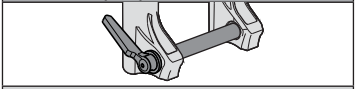
55 - 66

WHEEL AXLE SECURING SYSTEM WITH QR 15 QUICK RELEASE AXLE
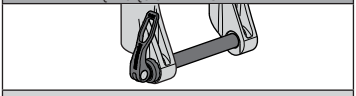
CORSA - 44 - 33

Table 4 - *Wheel securing systems*

3.4.1 Wheel installation on a fork with standard securing system

CORSA	MARATHON CORSA	44
33	22	DIRT JUMPER
TXC		

Install the wheel in compliance with the wheel manufacturer's instructions. For correct fork function after installing the wheel, you will need to:

- Check the fork-wheel alignment by fully compressing the fork a few times. The wheel should not make contact with, or come close to any portion of the fork.
- Lift the front of the bicycle, and spin the wheel a few times to verify correct alignment and spacing with the disk brake or the V-Brake brake pads. Check the owner's manual of the brake system for the proper specifications.

3.4.2 Wheel installation on ø32 fork with a 20 mm diameter through-hole axle

4X - DIRT JUMPER

For optimum fork performance, please follow the instructions below when installing the wheel:

- Place the wheel in between each fork.
- Align the center of the wheel with each wheel axle clamp (see 3A of Picture 3).
- Insert the axle through the wheel axle clamp of the right fork, through the wheel, and through the wheel axle clamp of the left fork (see 3A of Picture 3).
- Tighten the axle to the required torque (15±1 Nm) using a 6 mm Allen key to the axle caps (see 3B of Picture 3).
- Check for the proper fork-wheel alignment. To do this, begin by fully compressing the fork a few times. The wheel should not make contact with, or come close to any portion of the fork. Then lift the front of the bicycle and spin the wheel a few times to verify the correct alignment with the disk brake. The wheel should not wobble from side to side or up and down. Check the owner's manual of the brake system for the proper specifications.
- Tighten the screw positioned on each wheel axle clamp to the required torque (6±1 Nm) using a 4 mm Allen key (see 3C of Picture 3).

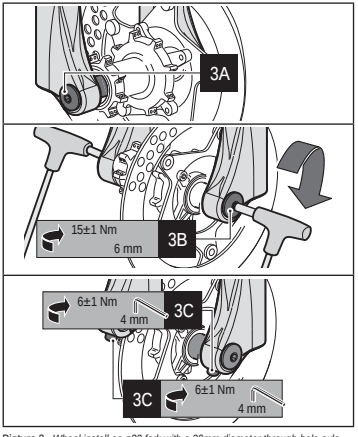

Picture 3 - *Wheel install on ø32 fork with a 20mm diameter through-hole axle*

3.4.3 Wheel installation on ø35/ø38 forks with a 20 mm diameter through-hole axle

888

For optimum fork performance, please follow the instructions below when installing the wheel:

- Place the wheel in between each fork.
- Align the center of the wheel with each wheel axle clamp (see 4A of Picture 4).
- Insert the axle through the wheel axle clamp of the right fork, through the wheel, and then screw it into the wheel axle clamp of the left fork (see 4A of Picture 4).
- Tighten the axle to the required torque (15±1 Nm) using a 6mm Allen key to the caps of the axle (see 4B of Picture 4).
- Check for the proper fork-wheel alignment. To do this, begin by fully compressing the fork a few times. The wheel should not make contact with, or come close to any portion of the fork. Then lift the front of the bicycle and spin the wheel a few times to verify the correct alignment with the disk brake. The wheel should not wobble from side to side or up and down. Check the owner's manual of the brake system for the proper specifications.
- Tighten the screws positioned on each wheel axle clamp to the required torque (6±1 Nm), with a "1-2-1" sequence, using a 4mm Allen key (see 4C of Picture 4).

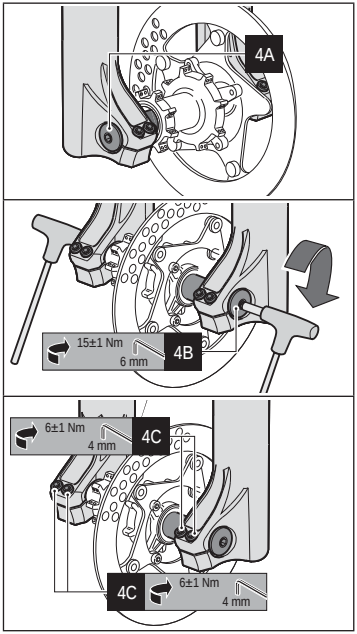

Picture 4 - *Wheel install on ø35/ø38 forks with a 20 mm diameter through hole axle*

3.4.4 Wheel installation on a fork with QR 20 quick release axle (all models 55 and 66)

55	66

The wheel-axle of the QR20 system allows, in a very quick way and without the use of tools, assembling and disassembling the front wheel in the fork.

For optimum fork performance, please follow the instructions below when installing the wheel:

WARNING!

Do not tighten the axle without having installed the hub between the wheel axle clamps of the fork.

- Place the wheel in between each fork.
- Align the center of the wheel with each wheel axle clamp (see 5A of Picture 5).
- Install the axle through the right wheel axle clamp. (see 5A of Picture 5).
- Pass through the hole in the centre of the hub until it stops against the left wheel axle clamp.
- By means of the lever installed in the end of the axle, screw it until you hear a "click" (see 5B of Picture 5); this way, the wheel will be correctly fastened to the fork.

WARNING!

The "click" means that the pre-established tightening torque has been reached, the axle has always to be screwed until you hear at least one "click".

- Check for the proper fork-wheel alignment. To do this, begin by fully compressing the fork a few times. The wheel should not make contact with, or come close to any portion of the fork. Then lift the front of the bicycle and spin the wheel a few times to verify the correct alignment with the disk brake. The wheel should not wobble from side to side or up and down. Check the owner's manual of the brake system for the proper specifications.
- The axle is equipped with a clutch that controls its tightening. Therefore, if necessary, go on screwing until the release lever is directed into the desired position, so that it is not subject to collisions during the use. Every time you change the position, you will hear a "click". During this procedure, do not unscrew the axle, except in case you need to disassemble the wheel.
- To disassemble the wheel, just act in reverse order, remember that the safety tooth of the axle (see 5C in figure 5) must be carried towards the inside to be able to remove the axle.

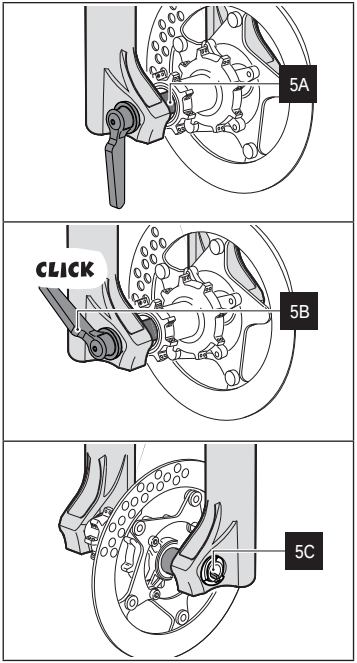

Picture 5 - *Wheel installation on a fork with QR 20 quick release axle*

3.4.5 Wheel installation on a fork with QR 15 quick release axle (models Corsa, 44 and 33)

CORSA	44	33

Corsa, 44 and 33 models can be equipped with the QR15 wheel axle system.

TheQR15 wheel axle system allows assembling and disassembling the front wheel in the fork in an extremely quick way and without the use of tools.

The wheel locking procedure is as simple as the QR for standard wheels with a 9mm axle.

For optimum fork performance, please follow the instructions below when installing the wheel:

- Place the wheel in between each fork.
- Align the centre of the wheel between the two wheel axle clamps (see 6A of Picture 6).
- Introduce the axle through the right wheel axle clamp.
- Pass through the hole in the centre of the hub until it stops against the tightening nut of the axle that is installed in the left wheel axle clamp.
- By keeping the locking lever in parallel direction to the axis, screw the axle in the nut or the nut in the axle (see 6B of Picture 6) without distinction. During the screwing operation, do not use the axle locking lever to increase the tightening torque.
- By means of the check lever installed in the end of the axle, lock the lever (see 6C of Picture 6); this way, the wheel will be correctly fastened to the fork.
- Check that the release lever is in a position that assures the correct fastening of the axle, and that it is in a position that it is not subject to collisions during the use (see 6C of Picture 6).
- Check for the proper fork-wheel alignment. To do this, begin by fully compressing the fork a few times. The wheel should not make contact with, or come close to any portion of the fork. Then lift the front of the bicycle and spin the wheel a few times to verify the correct alignment with the disk brake. The wheel should not wobble from side to side or up and down. Check the owner's manual of the brake system for the proper specifications.

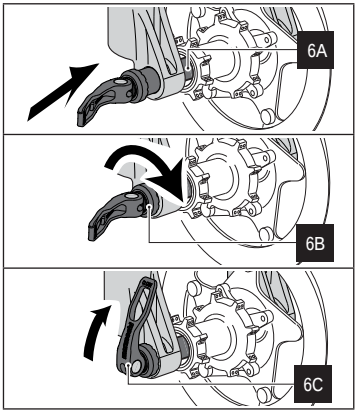

Picture 6 - *Wheel installation on a fork with QR 15 quick release axle*

3.5 Fender installation

888 RV

The fender may be provided with the fork, or purchased separately.

To install the fender, first insert the support bushing between the screw and fender (see 7A of Picture 7). Tighten the screw to the required torque (6±1 Nm) using a 8mm spanner (see 7B of Picture 7).

WARNING!

When the fender is assembled on a 888 fork, the position of the superior part of the crown must be in corrispondence to max line on the stanchion.

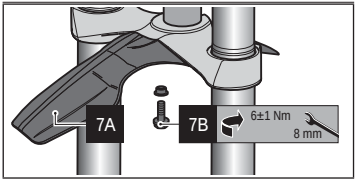

Picture 7 - *Fender installation*

3.6 Handlebar clamp installing on all Dual Crown models

888

To install the handlebar clamp, please carefully follow the instructions below:

- Place the lower mounting segment of the handlebar clamp on the upper crown of the fork (see 8A & 8B of Picture 8).
- Align the corresponding holes from each of these components.
- Secure the lower mounting segment of the handlebar clamp to the upper crown of the fork by tightening the screws to the required torque (6±1 Nm) using a 4mm Allen key (see 8C of Picture 8).
- Place the handlebar into the lower mounting segment of the handlebar clamp, being sure that it is centered (see 8D of Picture 8).
- Place each upper segment of the handlebar clamp over the handlebar (see 8E of Picture 8).
- Align the holes of the upper segment with the corresponding holes of the lower mounting segment.
- Secure the handlebar in place by tightening each screw to the required torque (6±1 Nm) using a 4mm Allen key (see 8F of Picture 8).

For installation of handlebars having different diameters, "reduction sleeves" may be placed around the handlebar (between the handlebar and each segment of the handlebar clamp) to ensure the handlebar is held in place (see 8G of Picture 8).

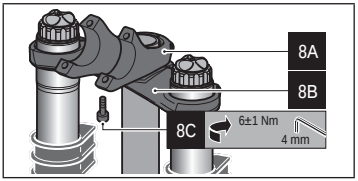

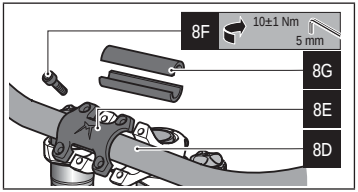

Picture 8 - *Handlebar clamp installation*

4. SUMMARIZING TABLES

Model	Initial lowering adjustment			Hydraulic system													
	Coil preload with mechanical adjuster	Coil preload with air / Air Preload	Positive air	VA	TST MICRO	TST5	TST2	LO	RC3	IRA	RV	R	Fixed Damping	ATA with PAR	ATA	SFA	CV
CORSA CENTO					LH											RH	
CORSA TST2			LH				RH										
CORSA LO			RH					LH									
MARATHON CORSA LT			LH			RH											
44 ATA MICRO					LH										RH		
44 ATA							RH								LH		
44 TST2			LH				RH										
44 LO			RH					LH									
33 TST2	LH						RH										
33 LO	RH							LH									
33 R	RH											LH					
22 LO	RH							LH									
22 R	RH											LH					
55 ATA MICRO					LH									RH			
55 RC3		LH							RH								
55 ATA							RH								LH		
55 TST2		LH					RH										
55 R		RH										LH					
55 RS	RH											LH					
4X WOLRLD CUP			X2						LH								
DIRT JUMPER 1		RH										LH					
DIRT JUMPER 2		RH										LH					
DIRT JUMPER 3	RH												LH				
66 ATA									LH					RH			
66 RC3	RH	LH							LH								
66 RCV		LH									LH						RH
888 ATA WORLD CUP				LH					LH					RH			
888 RC3 WORLD CUP	RH			LH					LH								
888 RC3	RH			LH					LH								
888 RCV											LH						RH
888 RV											LH						
TXC LO			RH					LH		RH							
TXC 1			X2							RH							
TXC 2	LH		RH							RH							

Table 5 - *Forks adjustments*

X2	Adjustment on both legs
RH	Adjustment on right leg
LH	Adjustment on left leg

Table 6 - *Key to table*

WARNING!

The operations listed below accompanied by this symbol should only be performed by authorized MARZOCCHI service centers.

General maintenance operation	Use	
	Intense	Normal
Check that screws are tightened to required torque	Before every ride	
Stanchions cleaning	After every ride	
Air pressure control	Before every ride	10 hours
Cleaning and lubrication of sealing rings	Before every ride	Every two ride
Oil seals control	25 hours	50 hours
Oil change	50 hours	100 hours
Cartridge oil replacement	25 hours	50 hours
Fork oil seals cartridge replacement	50 hours	100 hours

Table 7 - *Periodic maintenance table*

Part to be tightened	Tightening torque (Nm)
V-brake locking pins	9 ± 1
Fork's top caps	10 ± 1
Adjuster locking screws	2 ± 0,5
Pumping rod / cartridge foot nuts	10 ± 1
Pumping rod foot screws	10 ± 1
Fender fixing screws (888 RV)	6 ± 1
Handlebar clamp fixing screws (888)	6 ± 1
Lower crown fixing screws (888)	6 ± 1
Lower crown fixing screws (888)	6 ± 1
Wheel axle screws	15 ± 1
Allen screws for wheel axles	6 ± 1

Table 8 - *Tightening torques*

Air pressure values will vary depending on the rider, terrain, preferred travel position and personal preferences. This is to be used as a quick set-up guide for your first settings and may vary after riding the bicycle.

Using a low-pressure pump (Code: 4208/C) or a high-pressure pump (Code: 4209/C) for calibration. For all the calibrations lower than 7 bars (100 psi), a low-pressure pump is recommended, as it guarantees a more exact setting.

ATA with PAR				
Rider's weight	kg	< 70	70 ÷ 90	> 90
	lbs	< 155	155 ÷ 200	> 200
PAR air pressure	bar	6 ÷ 8	7 ÷ 9	8 ÷10
	psi	90 ÷ 120	105 ÷ 135	120 ÷ 150
ATA air pressure	bar	3 ÷ 5	4 ÷ 6	5 ÷ 7
	psi	45 ÷ 75	60 ÷ 90	75 ÷ 105

- The ATA valve is under the grey knob that also adjusts the travel / stroke of the fork. The knob is pressure fit and can be removed by pulling it upwards. This valve effects the beginning of the stroke of the fork but needs to be adjusted after the PAR (lower valve) has been pressured.
- The PAR valve is on the lower part of the fork leg and is protected by a red protection cover.

The system offers users a remarkable freedom of calibration, provided that the following instructions are observed.

- Deflate the ATA chamber (upper chamber) completely before adjusting the pressure of the PAR chamber (lower chamber).
- First inflate the lower chamber (PAR).
- The pressure of the lower chamber (PAR) must be higher than the pressure of the upper chamber (ATA) by at least 1 bar (15psi).
- If the pressure is increased from the PAR chamber, the progression at full travel is increased.
- Do not exceed a pressure of 12 bars (180psi) in the PAR chamber.
- Now you can adjust the upper chamber (ATA). By increasing the pressure in the upper chamber the SAG is reduced (beginning travel). If the pressure is reduced, the SAG increases.
- The air valve on the RC3 side should not be used for calibration. It should be used for pressure relief in the damping side that can accumulate during the use in the fork leg.

ATA / SFA				
Rider's weight	kg	< 70	70 ÷ 90	> 90
	lbs	< 150	150 ÷ 200	> 200
ATA air pressure	bar	6 ÷ 8	7 ÷ 9	8 ÷ 10
	psi	90 ÷ 120	105 ÷ 135	120 ÷ 150

The adjustment of the pressure in the ATA / SFA chamber is performed by means of the valve in the lower part of the cartridge.

Unscrew the black or red cap in order to access the valve.

4X		
Air pressure	bar	1,5 ÷ 3,5
	psi	22 ÷ 52

The adjustment of the air pressure is performed by means of the valves on the upper part of the fork.

Unscrew the black cap in order to access the valve of the right fork leg.

The valve of the left fork leg is protected by a small rubber protection cap. The cap is pressure-inserted. The special adapter (code: 5321530/C) must be used in order to inflate the air chamber.

Dirt Jumper 1 - Dirt Jumper 2		
Air pressure	bar	1÷ 3
	psi	15 ÷ 45

The air pressure is adjusted by means of the valve on the upper part of the right fork leg.

Unscrew the black cap in order to access the valve.

Corsa LO - Marathon Corsa LT - 44 LO - 44 TST2				
Rider's weight	kg	<70	70 ÷ 90	> 90
	lbs	< 155	155 ÷ 200	> 200
Air pressure	bar	2 ÷ 4	2,5 ÷ 3,5	3 ÷ 5
	psi	30 ÷ 60	37 ÷ 52	45 ÷ 75

The air pressure is adjusted by means of the valve on the upper part of the fork leg.

Unscrew the cap in order to access the valve.

A valve may present on the TST5 side of the Marathon Corsa LT. This valve must not be used for calibration, but it can be used in order to release the pressure that can accumulate during the use in the fork leg.

55 R - 55 TST2 - 55 RC3				
Rider's weight	kg	<70	70 ÷ 90	> 90
	lbs	< 155	155 ÷ 200	> 200
Air pressure	bar	0 ÷ 1	1 ÷ 2	2 ÷ 3
	psi	0 ÷ 15	15 ÷ 30	30 ÷ 45

The air pressure is adjusted by means of the valve on the upper part of the fork leg.

Unscrew the cap in order to access the valve.

66 RCV - 66 RC3		
Air pressure	bar	0 ÷ 1
	psi	0 ÷ 15

The air pressure is adjusted by means of the valve on the upper part of the fork leg.

In the RCV version, use the valve on the left fork leg; this valve is protected by a red cap, which can be removed by unscrewing it.

In the RC3 version, use the valve on the left fork leg; this valve is protected by a grey cap, which can be removed by unscrewing it. The special adapter (code: 5321530/C) must be used in order to inflate the air chamber.

Table 9 - *Recommended air pressure values*

5 WARRANTY

5.1 Warranty For Eu Countries

Marzocchi S.p.a. warrants that its suspension system is free from original conformity defects throughout a period of two (2) years from the date of the purchase, in accordance with the European Regulations. The retail invoice or, if any, the warranty certificate dated and stamped by Marzocchi retailer, enclosed with the product, prove the commencement date of the warranty and place of purchase of the product. In the event of a conformity defect within the aforesaid term, the purchaser should return the product to the Marzocchi retailer where he/she bought it, illustrating the defect and the reasons of the warranty claim. The retailer will inform the purchaser when the product has been repaired or replaced.

5.1.1.1 NOT COVERED: This warranty does not cover non-conformity defects after the purchase, such as damage resulting from accidents, alteration, neglect, misuse, abuse, improper use, improper assembly, improper maintenance, repairs improperly performed, replacement parts or accessories not conforming to Marzocchi S.p.A.'s specifications, modifications not recommended or approved in writing by Marzocchi S.p.A., activities such as acrobatics, stunt jumping, ramp riding, racing, commercial use, competitive use, use in mountain biking or BMX parks, use on BMX trails, and/or normal wear or deterioration occasioned by the use of the suspension system, and, in general, all subsequent non-conformity defects resulting from the non observance of the instructions of the product Use Manual.

This warranty does not cover, as they are not original non-conformities, items and substances subject to normal wear occasioned by use, such as oil, sealing rings, dust seals, and sliding bushes. In addition, this warranty is void in the event that the suspension system is used with rental bicycles. This warranty will be automatically void if the serial number of the Marzocchi suspension system is altered, erased, defaced or otherwise subject to any tampering. Finally, this warranty will not cover second-hand Marzocchi suspension systems and in this case the retailer will offer a warranty for the second-hand product, without liability of any kind, either direct or indirect, of Marzocchi Spa

5.1.1.2 TERRITORIAL LIMITATION: This warranty covers all the products bought only in a EU country (including Switzerland), except for products bought in a EU country but used in the USA which the clauses of the "Warranty rest of the world – USA included" apply to. Some EU countries set mandatory rules which govern the warranty for consumer goods; should these rules be inconsistent with the terms of this warranty, national mandatory rules shall take precedence.

WARNING!

Install, service and use the Marzocchi Suspension System in absolute compliance with the instructions in the "Instructions Manual".

5.1.2 PURCHASER: This warranty is made by Marzocchi S.p.A. with only the original purchaser of the Marzocchi suspension system, and does not extend to any third parties. The rights of the original purchaser under this warranty may not be assigned.

5.1.3 TERM: The term of this warranty shall commence on the date of purchase and shall continue for a period of two (2) years from the date of the original purchase. Replaced parts have a six (6) month warranty.

5.1.4 PROCEDURE: In the event of a defect covered by this warranty, the purchaser should exclusively contact the authorized Marzocchi dealer, from whom the purchaser bought the product (or Marzocchi USA).

5.1.5 ENTIRE AGREEMENT: This warranty supersedes any and all oral or express warranties, statements or undertakings that may previously have been made, and contains the entire agreement between the parties with respect to the warranty of this Marzocchi suspension system. Any and all warranties not contained in this warranty are expressly and specifically excluded.

5.1.6 DAMAGES: Except as expressly provided by this warranty, Marzocchi S.p.A. SHALL NOT BE RESPONSIBLE FOR ANY IMPROPER OR WRONG USE OF THE SUSPENSION SYSTEM AND FOR ANY INDIRECT DAMAGES, IF A PROFESSIONAL USE OF THE PRODUCT HAS NOT BEEN AGREED. The foregoing statements of warranty are exclusive and lieu of all other remedies. Some states do not allow the exclusion or limitation of incidental or consequential damages, so this limitation or exclusion may not be applicable.

5.1.7 DISCLAIMER: This Agreement shall be the sole and exclusive remedy available to the Purchaser with respect to this purchase. In the event of any alleged breach of any warranty or any legal action brought by the purchaser based on alleged negligence or other tortuous conduct by Marzocchi S.p.A., the Purchaser's sole and exclusive remedy will be repair or replacement of the defective materials, as stated above. No dealer and no other agent or employee of Marzocchi S.p.A. is authorized to modify, extend or enlarge this warranty.

5.1.8 WARNING: Always install, repair and use your Marzocchi suspension system in strict compliance with its owner's manual.

5.1.9 OTHER RIGHTS: This warranty gives you specific legal rights, and you may also have rights that may vary from state-to-state.

5.1.10 EUROPEAN WARRANTY APPLICABLE LAW: Any disputes arising out of this agreement or the use of this Marzocchi Suspension System will be governed by the laws of the country of Italy.

5.2 Warranty rest of the world excluding Europe – USA included

If any component of your suspension system is found to be defective in materials or workmanship within the term of this Limited Two Year Warranty (the "Agreement"), the defective component will be repaired or replaced, at the option of Marzocchi S.p.A., free of charge, within thirty (30) days after receipt of the same from an authorized Marzocchi dealer or Marzocchi USA, freight prepaid, together with the original retail invoice or other evidence of the date of purchase.

5.2.1 NOT COVERED: This warranty does not cover damage resulting from accidents, alteration, neglect, misuse, abuse, improper use, lack of reasonable or proper maintenance, improper assembly, repairs improperly performed, replacement parts or accessories not conforming to Marzocchi S.p.A.'s specifications in the Owner's Manual or on the Website www.marzocchi.com, , modifications not recommended or approved in writing by Marzocchi S.p.A., activities such as acrobatics, jumping, stunt riding, ramp riding, racing, commercial use, competitive use, use in mountain biking or BMX parks, use on BMX trails, and/or normal wear or deterioration occasioned by the use of the suspension system. This warranty does not cover items subject to normal wear due to the use of the suspension system, such as for example oil, oil seals, dust seals and bushes. We therefore ask you to check (or have your dealer check) its condition at the moment you purchase the suspension system, as that is the only time that it will be possible to replace such components. In addition, this warranty is void in the event that the suspension system is used with rental bicycles, unless Marzocchi S.p.A provided prior approval in writing for such use. This warranty also does not include any expenses related to the transportation of the Marzocchi suspension system to or from an authorized Marzocchi dealer (or Marzocchi USA), labor costs to remove the Marzocchi suspension system from the bicycle, or compensation for loss of use while the Marzocchi suspension system is being repaired. This warranty will be automatically void if the serial number of the Marzocchi suspension system is altered, erased, defaced or otherwise subject to any tampering. This warranty will be automatically void if the purchaser does not follow all the instructions in the Owner's Manual and in the website www.marzocchi.com.

⚠ WARNING!

Install, service and use the Marzocchi Suspension System in absolute compliance with the instructions in the "Instructions Manual".

5.2.2 PURCHASER: This warranty is made by Marzocchi S.p.A. with only the original purchaser of the Marzocchi suspension system, and does not extend to any third parties. The rights of the original purchaser under this warranty may not be assigned.

5.2.3 TERM: The term of this warranty shall commence on the date of purchase and shall continue for a period of two (2) years from the date of the original purchase. Replaced parts have a six (6) month warranty.

5.2.4 PROCEDURE: In the event of a defect covered by this warranty, the purchaser should contact an authorized Marzocchi dealer (or Marzocchi USA).

5.2.5 ENTIRE AGREEMENT: This warranty supersedes any and all oral or express warranties, statements or undertakings that may previously have been made, and contains the entire agreement between the parties with respect to the warranty of this Marzocchi suspension system. Any and all warranties not contained in this warranty are expressly and specifically excluded.

5.2.6 LIMITED WARRANTY: Except as expressly provided by this warranty, Marzocchi S.p.A. and Marzocchi USA, Inc. SHALL NOT BE RESPONSIBLE FOR ANY INCIDENTAL OR CONSEQUENTIAL DAMAGES ASSOCIATED WITH THE USE OF THE MARZOCCHI SUSPENSION SYSTEM OR A CLAIM UNDER THIS AGREEMENT, WHETHER THE CLAIM IS BASED ON CONTRACT, TORT OR OTHERWISE. The foregoing statements of warranty are exclusive and lieu of all other remedies. Some states do not allow the exclusion or limitation of incidental or consequential damages, so this limitation or exclusion may not apply to you.

5.2.7 DISCLAIMER: ANY IMPLIED WARRANTY OF MERCHANTABILITY OR FITNESS FOR A PARTICULAR PURPOSE AND ALL IMPLIED WARRANTIES ARISING FROM A COURSE OF DEALING, USAGE OR TRADE, BY STATUTE OR OTHERWISE, IS HEREBY STRICTLY LIMITED TO THE TERM OF THIS WRITTEN WARRANTY. This Agreement shall be the sole and exclusive remedy available to the Purchaser with respect to this purchase. In the event of any alleged breach of any warranty or any legal action brought by the purchaser based on alleged negligence or other tortuous conduct by Marzocchi S.p.A., the Purchaser's sole and exclusive remedy will be repair or replacement of the defective materials, as stated above. No dealer and no other agent or employee of Marzocchi S.p.A. is authorized to modify, extend or enlarge this warranty.

5.2.8 WARNING: Always install, repair and use your Marzocchi suspension system in strict compliance with its owner's manual.

5.2.9 OTHER RIGHTS: This warranty gives you specific legal rights, and you may also have rights that may vary from state-to-state.

5.2.10 APPLICABLE LAW IN THE REST OF THE WORLD: Any disputes arising out of this Agreement or caused by the use of the Marzocchi suspension system will be governed by the laws of the State of California, and will be exclusively decided by the Courts of Bologna, Italy.000

MARZOCCHI S.p.A.
[PHYSICAL] VIA GRAZIA, 2
40069 ZOLA PREDOSA
BOLOGNA, ITALIA
[TEL] +39.051.6168.711
[FAX] +39.051.758857

MARZOCCHI USA
[PHYSICAL]
28476 WESTINGHOUSE PLACE
VALENCIA, CALIFORNIA 91355
[TEL] 661.257.6630
[FAX] 661.257.6636

MARZOCCHI ASIA
[PHYSICAL] 25F-A2, N°760
CHUNG MING SOUTH ROAD
TAICHUNG, TAIWAN, R.O.C.
[TEL] +886.4.22634.382
[FAX] +886.4.22634.380

WWW.MARZOCCHI.COM
DEVELOPED IN ITALY

Cod. 9001361
06 - 2008- Ed. 00 - EN