marzocchi

WWW.MARZOCCHI.COM

BOMBER SUSPENSION OWNER'S MANUAL 2008

INTENDED USE CHART

	TREKKING / CROSS COUNTRY	ALL MOUNTAIN / FREERIDE	4X / DIRT JUMPER	EXTREME FREERIDE / DOWNHILL
	⚠WARNING USE ONLY FOR: • TREKKING / CROSS COUNTRY DO NOT USE FOR: • ALL MOUNTAIN / FREERIDE • 4X / DIRT JUMPER • DOWNHILL / EXTREME FREERIDE Misuse or abuse of these forks can result in fork failure, an accident, serious injury or death FOR PROPER USE INSTRUCTIONS SEE OWNERS MANUAL OR WWW.MARZOCCHI.COM PER CORRETTO UTILIZZO RIFERIRSI AL MANUALE D'USO O AL SITO WWW.MARZOCCHI.COM POUR UNE UTILISATION CORRECTE , VEUILLEZ VOUS RÉFÉRER AU MANUEL OU SUR LE SITE WWW.MARZOCCHI.COM FÜR HINWEISE ZUM RICHTIGEN EINSATZ DER PRODUKTE LESEN SIE BITTE DIE BEDIENUNGSANLEITUNG ODER SCHAUEN SIE UNTER WWW. MARZOCCHI.COM SIGA LAS INSTRUCCIONES CORRECTAS EN EL MANUAL DE USUARIO O EN WWW.MARZOCCHI.COM	⚠WARNING USE ONLY FOR: • ALL MOUNTAIN / FREERIDE DO NOT USE FOR: • 4X / DIRT JUMPER • DOWNHILL / EXTREME FREERIDE Misuse or abuse of these forks can result in fork failure, an accident, serious injury or death FOR PROPER USE INSTRUCTIONS SEE OWNERS MANUAL OR WWW.MARZOCCHI.COM PER CORRETTO UTILIZZO RIFERIRSI AL MANUALE D'USO O AL SITO WWW.MARZOCCHI.COM POUR UNE UTILISATION CORRECTE , VEUILLEZ VOUS RÉFÉRER AU MANUEL OU SUR LE SITE WWW.MARZOCCHI.COM FÜR HINWEISE ZUM RICHTIGEN EINSATZ DER PRODUKTE LESEN SIE BITTE DIE BEDIENUNGSANLEITUNG ODER SCHAUEN SIE UNTER WWW. MARZOCCHI.COM SIGA LAS INSTRUCCIONES CORRECTAS EN EL MANUAL DE USUARIO O EN WWW.MARZOCCHI.COM	⚠WARNING USE ONLY FOR: • 4X / DIRT JUMPER DO NOT USE FOR: • ALL MOUNTAIN / FREERIDE • DOWNHILL / EXTREME FREERIDE Misuse or abuse of these forks can result in fork failure, an accident, serious injury or death FOR PROPER USE INSTRUCTIONS SEE OWNERS MANUAL OR WWW.MARZOCCHI.COM PER CORRETTO UTILIZZO RIFERIRSI AL MANUALE D'USO O AL SITO WWW.MARZOCCHI.COM POUR UNE UTILISATION CORRECTE , VEUILLEZ VOUS RÉFÉRER AU MANUEL OU SUR LE SITE WWW.MARZOCCHI.COM FÜR HINWEISE ZUM RICHTIGEN EINSATZ DER PRODUKTE LESEN SIE BITTE DIE BEDIENUNGSANLEITUNG ODER SCHAUEN SIE UNTER WWW. MARZOCCHI.COM SIGA LAS INSTRUCCIONES CORRECTAS EN EL MANUAL DE USUARIO O EN WWW.MARZOCCHI.COM	
TXC	•			
MARATHON CORSA	•			
XC	•			
MX	•			
MZ	•			
55		•		
4X			•	
DIRT JUMPER			•	
66				•
888				•

Table 1 - *Intended use chart*

ENGLISH

I. USE OF THIS MANUAL

I.I General warnings

WARNING!

Descriptions preceded by this symbol contain information, instructions, or procedures, which, if not followed, can result in damage or malfunction of the suspension, environmental damages, accidents, personal injury or death.

REMEMBER

Descriptions preceded by this symbol contain information, or procedures recommended by MARZOCCHI for optimum use of the suspension.

WARNING!

Failure to follow the warnings and instructions could result in malfunction, accidents, personal injury or death.

WARNING!

Failure to properly match the suspensions to your frame could cause malfunction of the suspension, resulting in a loss of control of the bicycle, and possible serious injury or death to the rider.

Please note that throughout this manual, reference is made that “accidents” could occur. Any accident could result in loss of bicycle control, damage to your bicycle or its components, and more importantly, cause you or a bystander to sustain severe personal injury or death.

Please be advised that suspension system installation, service and repair tasks require specialized knowledge, tools and experience. General mechanical aptitude may not be sufficient to properly install, service or repair your suspension system. Installation and maintenance of the suspension system must be carried out only by an authorized Marzocchi Service Center. Improper installation, service or repair may lead to accidents, resulting in personal injury or death.

For further information, please consult the www.marzocchi.com web site or contact your nearest Marzocchi Service Center. A list of service centers can be found on our web site.

I.II General safety recommendations

Never make any modifications whatsoever to any component of the suspension system. The components of the Marzocchi suspension system are designed as a single integrated system. To avoid compromises in terms of safety, performance, durability and function, use only original Marzocchi components for substitution.

It is necessary to learn how to ride your bike without going beyond your personal capabilities. Always use the proper safety equipment, and ensure that all your riding equipment is in excellent condition.

Damage to your suspension can occur if your bicycle strikes any overhead object, such as garages, bridges, tree limbs or other obstacles, while attached to a bicycle carrier, at any speed.

Always check your suspension and if there are deformations, cracks, impact marks, stress marks or bent parts, no matter how slight, it is necessary to have the suspension checked by an authorized Marzocchi Service Center.

The suspension system will show signs of wear and tear through time. Have your bike periodically checked for oil leaks, cracks, chips or other signs of wear and tear by an authorized Marzocchi Service Center.

The frequency of inspection depends on many factors; check with your Authorized Marzocchi Representative to select a schedule that is best for you.

When using a bicycle carrier (car roof rack or rear-hitch mount), be sure to fully loosen the quick release fastener on the carrier when mounting or removing your bicycle. Additionally, be sure to always keep your bicycle in a vertical position when mounting or removing your bicycle to and from the bicycle carrier. Failure to fully loosen the quick release fastener, or any bending action while mounting or removing your bicycle to and from the carrier, could result in scratching, bending, or cause other damages your suspension system.

Learn and follow the local bicycle laws and regulations, and obey all traffic signals, signs and laws while you ride.

Always wear a properly fitted and fastened bicycle helmet that has been approved by ANSI, SNELL or CE, and any other safety equipment necessary for your riding style.

When riding in wet conditions, remember that the stopping power of your brakes is greatly reduced and that the adherence of the tires on the ground is considerably reduced. This makes it harder to control and stop your bicycle. Extra care is required when riding your bicycle in wet conditions to avoid an accident.

Avoid riding at night because it is more difficult for you to be seen by traffic, and it is more difficult for you to see obstructions on the ground. If you do ride at night, or in conditions of poor visibility, equip your bicycle with and use a headlight and a taillight. Wear clothes that are snug-fitting and that make you visible to traffic, such as neon, fluorescent, or other bright colors.

Carefully read and follow all instructions and warnings supplied.

I.III Before every ride

WARNING!

Do not ride your bicycle if it does not pass this pre-ride test.

Check your suspensions for any leaks or other traces of oil, which is indicative of a problem with your suspension. Be sure to turn your bicycle upside down to check areas such as the underside of the crown for evidence of an oil leak.

Be sure that all components of the suspensions and the bicycle, including the brakes, pedals, handgrips, handlebars, frame and seating system, are in optimum condition and suitable for use.

Be sure that none of the components of your suspension system or of the bicycle are bent, deformed or otherwise damaged.

Check that all quick release fasteners, nuts and bolts are properly fastened. Bounce the bicycle on the ground while listening and looking for anything that may be loose.

Be sure that your wheels are perfectly aligned. Spin the wheels to ensure that they do not wobble up and down or from side to side, and that they do not make contact with the suspension legs or brake pads while rotating.

Be sure that all cables and other components of your braking system are in their proper position, properly adjusted and that your braking system is functioning properly.

Be sure that your tires are inflated to the correct pressure and that there is no damage whatsoever in the tread or sidewall of the tire.

Check that all reflectors are clean, straight and securely mounted.

II. INTENDED USE INSTRUCTIONS

II.I Select the correct riding style

Marzocchi suspensions are among the most durable and technologically advanced suspension systems on the market today. However, no suspension can withstand misuse, abuse or improper use that, over a short period of time, can cause your suspensions to fail when you least expect it. It is critical that you select and use the suspension system that is appropriate for your riding style, and that you use it properly.

Select the suspension that is appropriate for your riding style by referring to the table «intended use chart» (Table 1, page 2). Please see your Marzocchi retailer, or contact Marzocchi directly, if you require assistance in selecting the correct suspension.

II.II Identifying your intended use

Trekking/Cross-Country: Riding along hilly trails where some bumps and smaller obstacles, such as rocks, roots, or depressions, may be encountered. Trekking/Cross-Country riding does not include jumps or “drops” (riding off rocks, fallen trees or ledges) from any height. These forks must be used with tires specifically designed for trekking/cross country riding, and disk, rim or linear pull brakes. You should only attach generators and racks, if any, to the designated mounting points provided on the forks.

All Mountain/Freeride: This riding style is for skilled riders, and involves steep, aggressive slopes, large obstacles, and moderate jumps. Freeride forks should be used only with disk brakes, and those frames, wheels and

other components specifically designed for this riding style. The disk brakes must be attached to the designated mounting points provided on the fork. Never make any modification to your fork when attaching any equipment.

4X/Dirt Jumper: This “BMX” or “motocross” style of riding is only for the most skilled riders, and involves jumping from one mound of dirt to another. It also includes riding over and around ”urban obstacles” such as man-made, or other concrete, structures, or racing on a track consisting of jumps made from mounds of dirt which the rider must negotiate by jumping or turning at speed. These forks should only be used with disk brakes, and those frames, wheels and other components specifically designed for this riding style. The disk brakes must be attached to the designated mounting points provided on the fork. Never make any modification to your fork when attaching any equipment.

Extreme Freeride/Downhill: This discipline is only for professional or highly skilled riders. It includes relatively high jumps or “drops’ and negotiating larger obstacles such as boulders, fallen trees, or holes. These forks should be used only with disk brakes, and those frames, wheels and other components specifically designed for this riding style. The disk brakes must be attached to the designated mounting points provided on the fork. Never make any modification to your fork when attaching other equipment.

WARNING!

Failure to properly overcome obstacles on the trail, or failure to properly land after a jump or drop, could cause your suspensions to fail, resulting in a loss of bicycle control, serious injury, or death to the rider.

Learn how to properly flow around obstacles on the trail. Hitting obstacles such as rocks, trees or holes straight-on puts forces on your suspension it was not designed to absorb. Landing improperly after a jump or drop also puts forces on your suspension it was not designed to absorb.

You should only perform jumps or drops when a transition, or down ramp, is available to help your bicycle absorb the impact forces generated during the landing by having both wheels smoothly make contact with the transition, or down ramp, at the same time. Any other type of landing is dangerous, as it could result in accidents or damages to the components.

Ensure that the steepness and length of the transition, or down ramp, are suitable for the height from which you jump or drop and that you are skilled enough to perform them.

1. INTRODUCTION

1.1 Conventions

1.1.1 Orientation of the fork

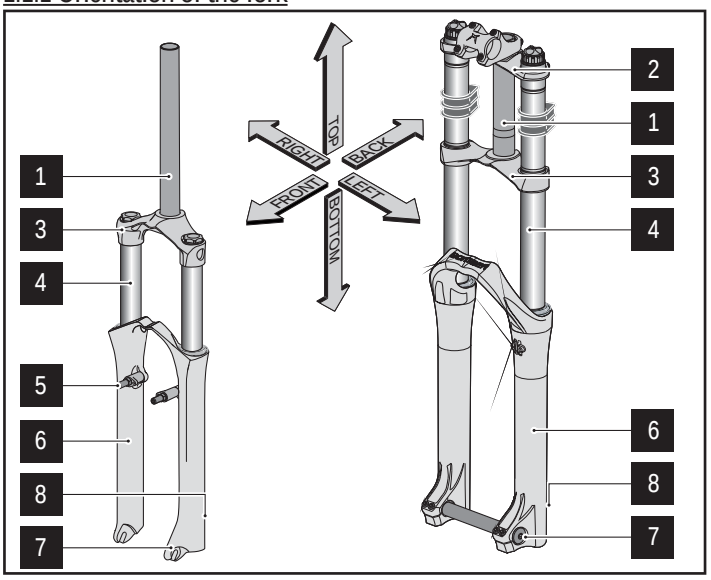

Picture 1 - *Conventional orientation of the fork*

1.1.2 Main parts of the fork

1. Steer tube, 2. Upper crown, 3. Lower crown, 4. Stanchion tube, 5. Brake boss, 6. Monolite, 7. Dropout, 8. Disc brake mount.

2. TECHNICAL INFORMATION

2.1 Spring system

Inside MARZOCCHI forks you will find coil springs, or air, used as suspension mechanism.

2.2 Damping system

The damping load that is generated during compression and rebound of the fork legs can be adjusted by hydraulic valve pumping rods, or by special cartridges.

WARNING!

NEVER use the compression lock position while riding downhill as the fork will not react properly when hitting obstacles, and can result in a loss of control of the bicycle, an accident, personal injury, or death.

TST MICRO

The TST Micro is the evolution of our TST5. It has infinite positions for a customized trail selection. With the micro adjuster at the top of the slider the rider can change the range of the compression from light to full lock.

TST 5

The TST5 system uses a sealed cartridge with a rubber lung for oil collection. The TST5 cartridge is provided with a rebound adjuster in the lower area and a 5-position compression adjuster in the upper area. The 5th position corresponds to blocking.

TST2

The Trail Selection Technology 2 is our basic version of the TST without the fine adjustment settings, but with all the trail tuning benefits which equates to an enjoyable ride in all the terrain condition and riding style.

LO

The LO cartridge allows for “on-the-fly” adjustment of the compression damping. The CLOSE position holds the fork’s legs extended making it easier to face hard, steep climbs. On some models, the LO system can be activated by a remote control on the handlebar.

RC3

Marzocchi’s most advanced technology. The RC3 suspension systems features all the tuning capabilities for the high performance racing and free riding feeling: Rebound adjuster to control the extension, Position Sensitive Compression controlled by the left center knob, High speed and low speed compression controlled automatically by the bottom knob to change the range of compression.

RV

Evolution of the super reliable SSVF, the new RV is an easy to use rebound adjustment to control the speed of extension keeping the wheel on the ground in all riding conditions.

R

Perfect for beginners or bike enthusiasts, the R valve is the basic rebound adjustment used to control the extension rate. Adjustable from the bottom keeps the system easy to use and inexpensive for the customer.

ATA

The Air Travel Adjust integrates a dual rate air spring to create the most coil spring alike compression curve and a super smooth 40 mm infinite travel adjustment. Using one Schrader air valve on the top of the stroke for a perfect tuning of the positive and the negative air chambers. At the bottom of the leg a second Schrader air valve allow to modify the progression curve and to control the bottom-out.

ATA2

Simplified version of the ATA the Air Travel Adjust 2 futures an integrated dual rate air spring as well as 40 mm of infinite travel adjustment. This no-compromise Marzocchi technology uses only one air valve to control the spring rate at the top of the stroke.

SFA

The easy to use technology developed by Marzocchi allows use one Schrader air valve on the top of the stroke for a perfect tuning of the positive and the negative air chambers. At the bottom of the leg a second Schrader air valve allow to modify the progression curve and to control the bottom-out.

ETA

ETA is one of the most popular and effective features developed by Marzocchi. The Extension Travel Adjustment will keep the fork compressed for easy climbing by simply turning the lever and always have 25 mm of travel. This climbing feature is a must for long travel forks.

CV

The CV is the evolution of the super reliable SSVF. The new CV is an easy to use compression adjustment to control the compression rate and keeping the wheel sticking to the ground in all riding condition.

VA

Each rider can adjust the spring preload and the air volume by simply turning the knobs. By increasing preload the air volume is reduced, and the rider can have more progressivity without the need to open the fork or put stiffer springs.

2.3 Lubrication and cooling

Pumping rods are immersed in oil (Open Bath System). This system provides proper lubrication and cooling of the inner sliding parts. Furthermore, the oil volume works as a damping and setting element. The Open Bath system reduces the maintenance frequency compared to a sealed cartridge system. On models of the fork that use elastomers, the proper internal lubricant is grease.

2.4 Sliding bushing and oil seals

Stanchion tubes are guided in the sliders by two Teflon‘-coated bushings, free from static friction. The seal system minimizes oil leaks, and contamination from particles entering the fork, by means of a special, dual-lip oil seal and a dust seal at the top of each slider.

3. INSTALLATION

3.1 Installing on the frame

The fork is supplied with an “A-Head Set” steer tube to be cut according to the frame size the fork is being installed on. Installing the fork on the bicycle frame is a delicate and critical operation, and should only be performed by skilled, trained personnel.

WARNING!

Suspension system installation requires specialized knowledge, tools and experience. General mechanical aptitude may not be sufficient to properly install your suspension system. Please have your suspension system installed only by an authorized Marzocchi Suspension Center. Improper installation can result in failure of your Marzocchi Suspension System, an accident, personal injury, or death.

The interference of the cylinder on the base and the play between the cylinder and frame are particularly critical factors for the safety of the operator. For this reason, maintenance and installation must be performed exclusively at authorised technical assistance centres, which have suitable equipment and specific knowledge.

WARNING!

On all dual crown MY 2008 MARZOCCHI models, the lower crown is clamped to the stanchions using bolts. In this case, please be aware of the following precautions during installation.

- In case of oversized diameter areas on the stanchions, the crowns clamping can only be done in the shaded area shown in Picture 2A.
- In case of reference notches on the stanchions, the lower part of the lower crown must be positioned above the MIN notch and below the MAX notch.
- The distance between the inflated tire and the lower part of the lower crown, when the fork is at travel’s end, must be at least 4 mm.
- On the dual crown forks the maximum length of the steer tube between the two crowns (see Picture 2B) must be smaller than the values (H) shown in Table 1.

NOTE

A protective film to be removed before use protects the stickers.

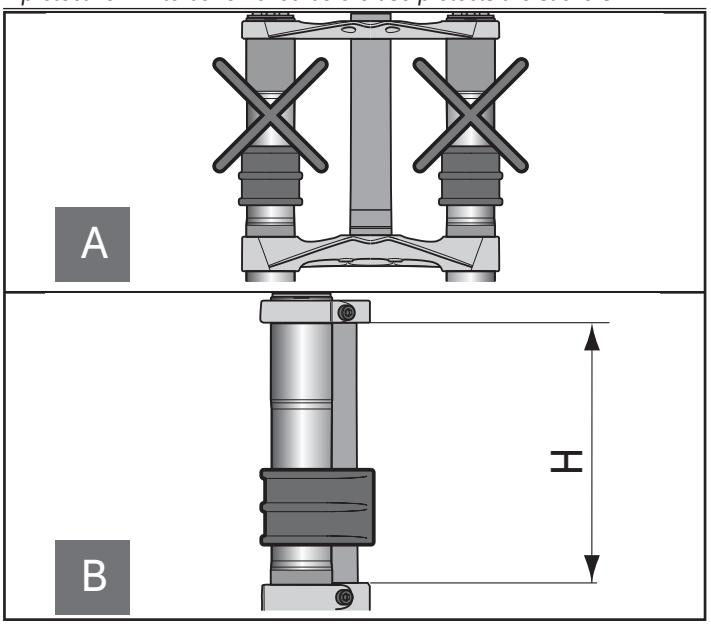

Picture 2 - *Dual crown forks installation on the frame: (2A) Crowns fastening, (2B) Steer tube maximum length between crowns*

Model	Max length between crowns (H)
888 (except 888 RV)	160 mm
888 RV	158 mm

Table 1 - *Steer tube maximum length between crowns*

3.2 Installing the brake system

Installing the brake system is a delicate and critical operation that must be carried out by specialized personnel.

WARNING!

Brake system installation requires specialized knowledge, tools and experience. General mechanical aptitude may not be sufficient to properly install your brake system. Please have your brake system installed only by an authorized Marzocchi Service Center. Improper installation of a disk brake system can overstress the caliper mountings, which may cause the caliper mountings to break, resulting in loss of control of the bicycle, an accident, personal injury, or death. Be sure that the brake system installation is also performed in strict compliance with the instructions provided by the brake system manufacturer.

Use only brake systems that comply with the forks specifications, taking into consideration the contents of the summarizing tables contained in this manual.

WARNING!

A special thread-lock treatment is applied to the thread on the bolts (see 2A in Table 2). Bolts that are installed and later removed lose this thread-lock treatment, and therefore can never be used again.

WARNING!

Make sure, before every ride, that the brake cable of the disk brake system is correctly connected to the proper mounting (see 2B, 2F & 2H in Table 2).

WARNING!

The brake cable must never touch the crown and stanchions.

WARNING!

Before installing a Post Mount braking system, check that the protection film has been removed from the brake caliper.

MARATHON CORSA	XC - MX -MZ
V-BRAKE SYSTEM SETTING	
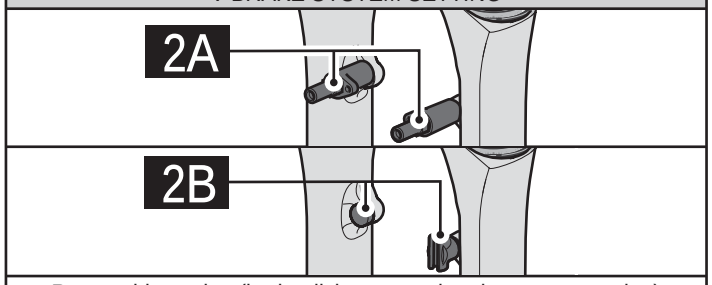	
Removable setting (brake disk system sheath supports setting)	
BRAKE DISK SYSTEM SETTING	
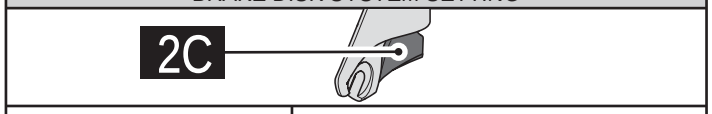	
Post Mount 6”	Post Mount 6”
	(7” disk installation is also possible)[1]

TXC
V-BRAKE SYSTEM SETTING
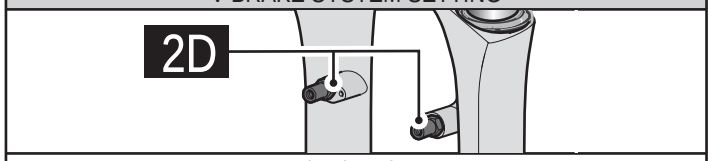
Fixed setting
BRAKE DISK SYSTEM SETTING
XC INTL STD 6” + DRUM brake

4X - 888 RV - DIRT JUMPER - Z.1
V-BRAKE SYSTEM SETTING
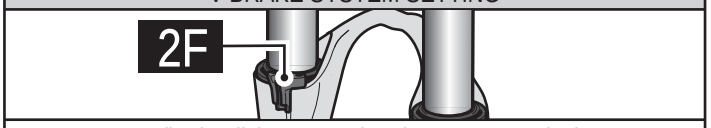
No (brake disk system sheath supports setting)
BRAKE DISK SYSTEM SETTING
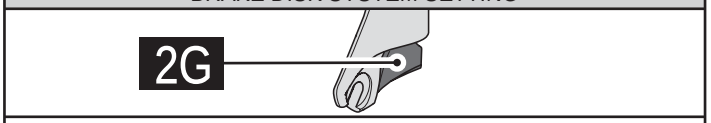
Post Mount 6”
(8” disk installation is also possible)[1]

55	66 -888 (except 888 RV)
V-BRAKE SYSTEM SETTING	
No (brake disk system sheath supports setting)	
BRAKE DISK SYSTEM SETTING	
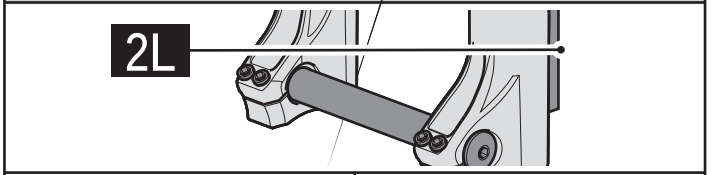	
Post Mount 6”	Post Mount 8”
(8” disk installation is also possible)[1]	(9” disk installation is also possible)[1]

Table 2 - *Braking system settings*

[1] Installation is only possible when the specific adapter is supplied by the brake system manufacturer.

3.3 Wheel installation

Model	Max tire dimension
MARATHON CORSA - XC - MX - MZ	2,2” x 26”
4X - 55 - 66 - 888 DIRT JUMPER - Z.1	2,8” x 26”
TXC	2,0” x 28”

Table 3 - *Maximum tire dimension*

In the event you need to install wheels with dimensions larger than those specified in Table 3, above, you must verify that:

- The tire turns freely;
- The tire does not make any contact with the brake arch or V-Brake system;
- The distance between the inflated tire and the lower part of the lower crown is at least four (4) mm when the forks' legs are fully compressed.

WHEEL AXLE SECURING SYSTEM WITH STANDARD DROPOUTS
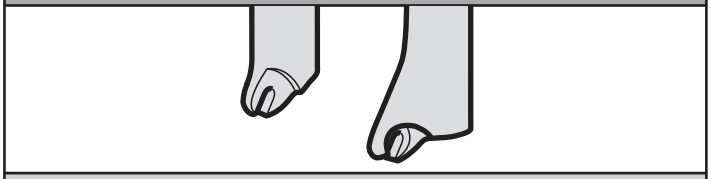
CORSA - DIRT JUMPER - XC - MX - MZ - TXC - Z.1

WHEEL AXLE SECURING SYSTEM WITH
20 MM DIAMETER THROUGH-HOLE AXLE

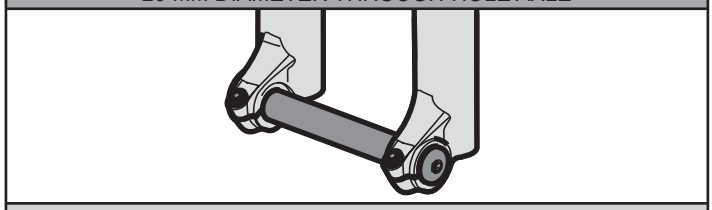

4X - DIRT JUMPER - Z.1

WHEEL AXLE SECURING SYSTEM WITH
20 MM DIAMETER THROUGH-HOLE AXLE

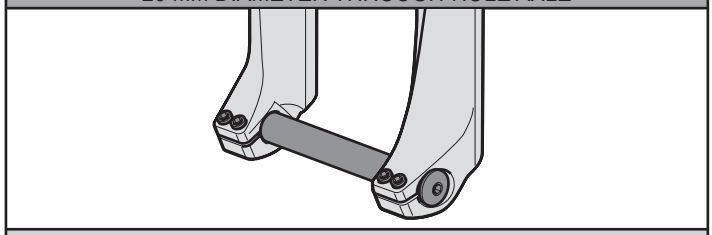

888 RV

WHEEL AXLE SECURING SYSTEM WITH
20 MM DIAMETER THROUGH-HOLE AXLE

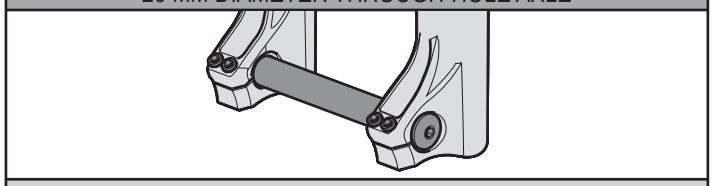

888 (except 888 RV)

WHEEL AXLE SECURING SYSTEM WITH
QR QUICK RELEASE AXLE

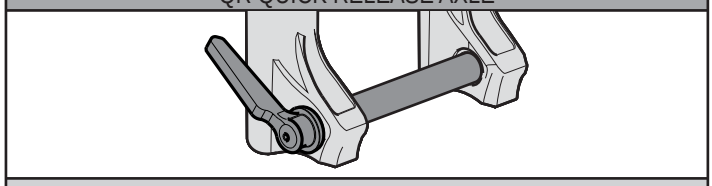

55 - 66

Table 4 - *Wheel securing systems*

3.4 Wheel axle securing system

The system for securing the wheel axle to the fork sliders can be standard, which uses the traditional advanced dropouts, or have a 20 mm diameter through-hole axle or with QR quick release axle.

Forks that are created for more intensive use are provided with a wheel fastening system, which originates from the motocross application and uses a 20 mm axle.

The new QR system allows combined hardness and easy installation.

3.4.1 Wheel installation on a fork with standard securing system

MARATHON CORSA	DIRT JUMPER	XC
MX	MZ	TXC
Z.1		

Install the wheel in compliance with the wheel manufacturer's instructions. For correct fork function after installing the wheel, you will need to:

- Check the fork-wheel alignment by fully compressing the fork a few times. The wheel should not make contact with, or come close to any portion of the fork.
- Lift the front of the bicycle, and spin the wheel a few times to verify correct alignment and spacing with the disk brake or the V-Brake brake pads. Check the owner's manual of the brake system for the proper specifications.

3.4.2 Wheel installation on ø32 fork with a 20 mm diameter through-hole axle

4X	DIRT JUMPER	Z.1

For optimum fork performance, please follow the instructions below when installing the wheel:

- Place the wheel in between each fork.
- Align the center of the wheel with each wheel axle clamp (see 3A of Picture 3).
- Insert the axle through the wheel axle clamp of the right fork, through the wheel, and through the wheel axle clamp of the left fork (see 3A of Picture 3).
- Tighten the axle to the required torque (15±1 Nm) using a 6 mm Allen key to the axle caps (see 3B of Picture 3).
- Check for the proper fork-wheel alignment. To do this, begin by fully compressing the fork a few times. The wheel should not make contact with, or come close to any portion of the fork. Then lift the front of the bicycle and spin the wheel a few times to verify the correct alignment with the disk brake. The wheel should not wobble from side to side or up and down. Check the owner's manual of the brake system for the proper specifications.
- Tighten the screw positioned on each wheel axle clamp to the required torque (6±1 Nm) using a 4 mm Allen key (see 3C of Picture 3).

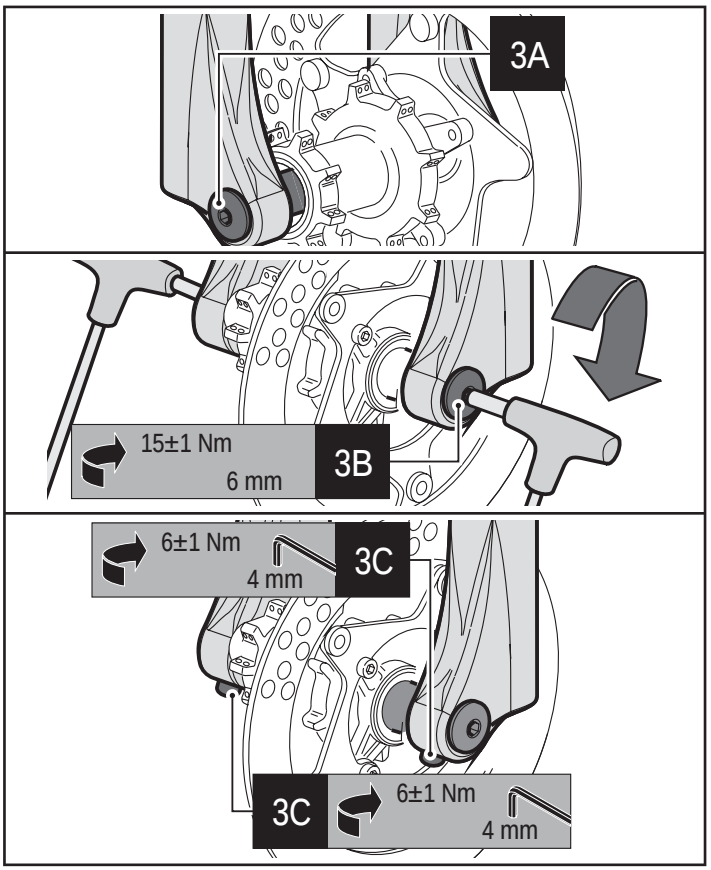

Picture 3 - *Wheel install on ø32 fork with a 20mm diameter through-hole axle*

3.4.3 Wheel installation on ø35/ø38 forks with a 20 mm diameter through-hole axle

888

For optimum fork performance, please follow the instructions below when installing the wheel:

- Place the wheel in between each fork.
- Align the center of the wheel with each wheel axle clamp (see 4A of Picture 4).
- Insert the axle through the wheel axle clamp of the right fork, through the wheel, and then screw it into the wheel axle clamp of the left fork (see 4A of Picture 4).
- Tighten the axle to the required torque (15±1 Nm) using a 6mm Allen key to the caps of the axle (see 4B of Picture 4).
- Check for the proper fork-wheel alignment. To do this, begin by fully compressing the fork a few times. The wheel should not make contact with, or come close to any portion of the fork. Then lift the front of the bicycle and spin the wheel a few times to verify the correct alignment with the disk brake. The wheel should not wobble from side to side or up and down. Check the owner's manual of the brake system for the proper specifications.
- Tighten the screws positioned on each wheel axle clamp to the required torque (6±1 Nm), with a "1-2-1" sequence, using a 4mm Allen key (see 4C of Picture 4).

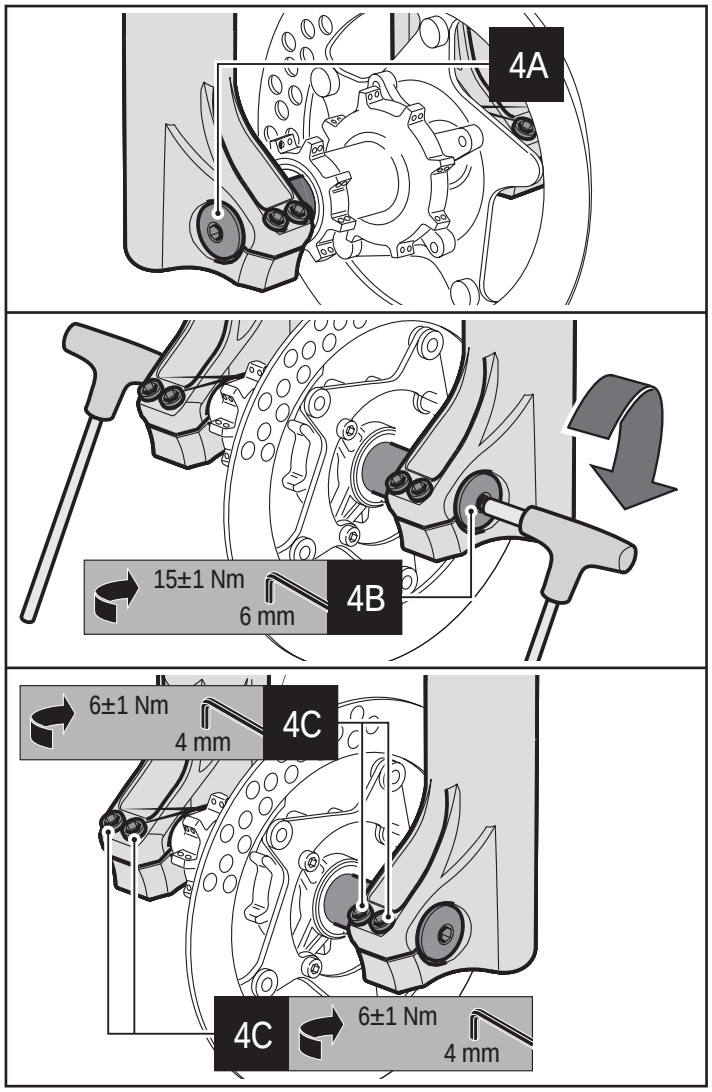

Picture 4 - *Wheel install on ø35/ø38 forks with a 20 mm diameter through hole axle*

3.4.4 Wheel installation on a fork with QR quick release axle

55	66

For optimum fork performance, please follow the instructions below when installing the wheel:

- Place the wheel in between each fork.
- Align the center of the wheel with each wheel axle clamp (see 5A of Picture 5).
- Insert the axle through the wheel axle clamp of the right fork, through the wheel, and then screw it into the wheel axle clamp of the left fork (see 5A of Picture 5).
- Screw the axle until you hear "click" (see 5B of Pict 5).
- Check for the proper fork-wheel alignment. To do this, begin by fully compressing the fork a few times. The wheel should not make contact with, or come close to any portion of the fork. Then lift the front of the bicycle and spin the wheel a few times to verify the correct alignment with the disk brake. The wheel should not wobble from side to side or up and down. Check the owner's manual of the brake system for the proper specifications.

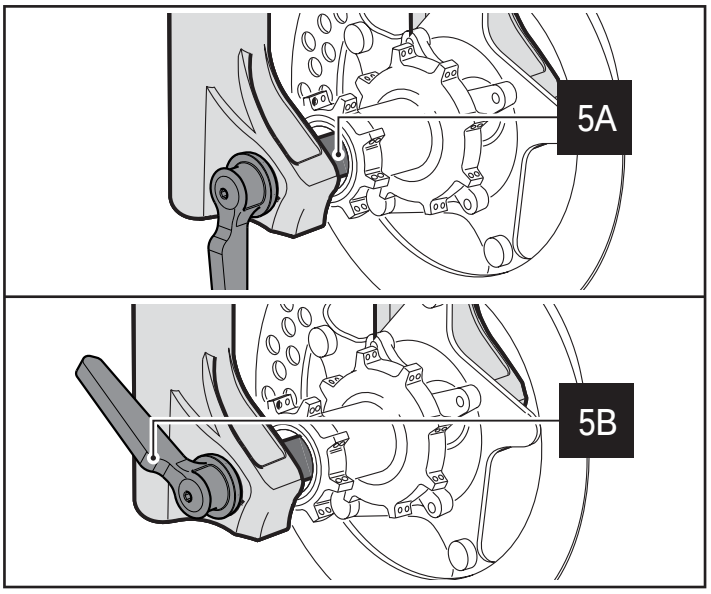

Picture 5 - *Wheel installation on a fork with QR quick release axle*

3.5 Fender installation

888 RV

The fender may be provided with the fork, or purchased separately.

To install the fender, first insert the support bushing between the screw and fender (see 6A of Picture 6). Tighten the screw to the required torque (6±1 Nm) using a 8mm spanner (see 6B of Picture 6).

WARNING!

When the fender is assembled on a 888 fork, the position of the superior part of the crown must be in corrispondence to max line on the stanchion.

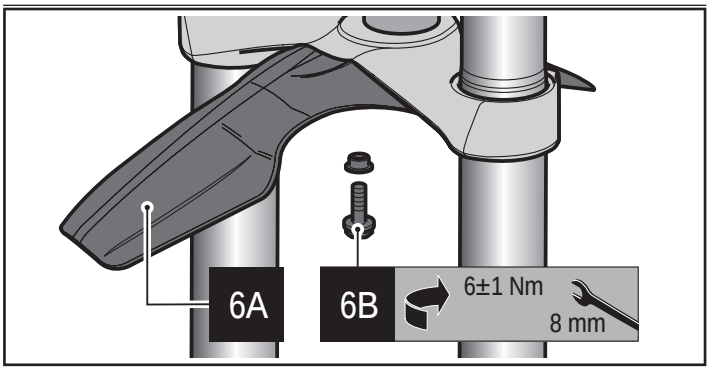

Picture 6 - *Fender installation*

3.6 Handlebar clamp installing on all Dual Crown models

888

To install the handlebar clamp, please carefully follow the instructions below:

- Place the lower mounting segment of the handlebar clamp on the upper crown of the fork (see 7A & 7B of Picture 7).
- Align the corresponding holes from each of these components.
- Secure the lower mounting segment of the handlebar clamp to the upper crown of the fork by tightening the screws to the required torque (6±1 Nm) using a 4mm Allen key (see 7C of Picture 7).
- Place the handlebar into the lower mounting segment of the handlebar clamp, being sure that it is centered (see 7D of Picture 7).
- Place each upper segment of the handlebar clamp over the handlebar (see 7E of Picture 7).
- Align the holes of the upper segment with the corresponding holes of the lower mounting segment.
- Secure the handlebar in place by tightening each screw to the required torque (6±1 Nm) using a 4mm Allen key (see 7F of Picture 7).

For installation of handlebars having different diameters, "reduction sleeves" may be placed around the handlebar (between the handlebar and each segment of the handlebar clamp) to ensure the handlebar is held in place (see 7G of Picture 7).

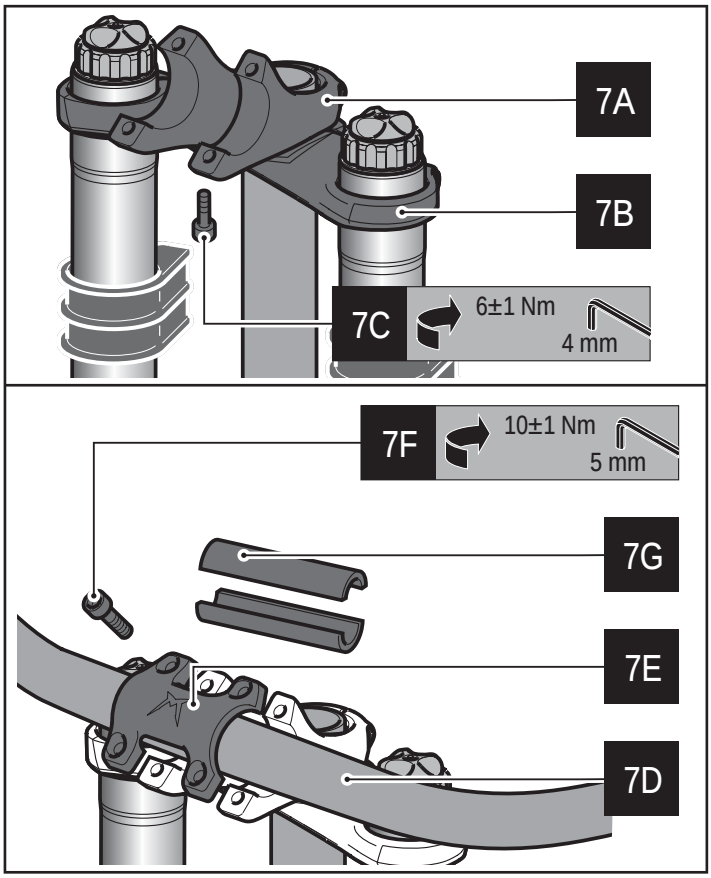

Picture 7 - *Handlebar clamp installation*

4. SUMMARIZING TABLES

WARNING!

The operations listed below accompanied by this symbol should only be performed by authorized MARZOCCHI service centers.

General maintenance operation	Use	
	Intense	Normal
Check that screws are tightened to required torque	Before every ride	
Stanchions cleaning	After every ride	
Air pressure control	Before every ride	10 hours
Oil seals control	25 hours	50 hours
Oil change	50 hours	100 hours
Cartridge oil replacement	25 hours	50 hours
Fork oil seals cartridge replacement	50 hours	100 hours

Table 5 - *Periodic maintenance table*

Part to be tightened	Tightening torque (Nm)
V-brake locking pins	9 ± 1
Fork's top caps	10 ± 1
Adjuster locking screws	2 ± 0,5
Pumping rod / cartridge foot nuts	10 ± 1
Pumping rod foot screws	10 ± 1
Fender fixing screws (888 VF)	6 ± 1
Handlebar clamp fixing screws (888)	6 ± 1
Lower crown fixing screws (888)	6 ± 1
Lower crown fixing screws (888)	6 ± 1
Wheel axle screws	15 ± 1
Allen screws for wheel axles	6 ± 1

Table 6 - *Tightening torques*

Positive air pressures - Preload air pressures					
Rider's weight	kg	55-70	70-80	80-95	95-110+
	lbs	120-155	155-180	180-210	210-220+
Positive air pressure	bar	2.00-2.75	2.40-3.10	2.90-3.80	3.60-4.50
	psi	30-40	35-45	42-52	52-65
Preload air pressure	bar	0 - 1.00			
	psi	0 - 15			
Air pressures SFA cartridge - Air pressures ATA/ATA2 cartridge					
Rider's weight	kg	< 65	65-75	75-90	> 90
	lbs	< 145	145-165	165-200	> 200
SFA air pressure	bar	7	8	9	10
	psi	103	117	132	147
PAR air pressure SFA cartridge	bar	9	10	11	12
	psi	132	147	161	175
ATA/ATA2 air pressure	bar	7	8	9	10
	psi	103	117	132	147
PAR air pressure ATA cartridge	bar	9	10	11	12
	psi	132	147	161	175

Table 7 - *Recommended air pressure values*

Model	Initial lowering adjustment			Hydraulic system													
	Spring preload with mechanical adjuster	Spring preload with air	Positive air	VA	TST MICRO	TST5	TST2	LO	RC3	IRA	RV	R	ATA	ATA2	SFA	ETA	CV
MARATHON CORSA SL WORLD CUP					LH										RH		
MARATHON CORSA LT			LH			RH											
XC 700 ATA					LH								RH				
XC 700 ETA		RH					LH									RH	
XC 600 ATA2							RH							LH			
XC 600 TST2			LH				RH										
XC 500 ETA		RH										LH				RH	
XC 500 R			RH									LH					
MX PRO LO		RH						LH			RH						
MX LO	RH							LH									
MZ RACE	RH							LH									
MZ SUPERCOMP	RH											LH					
MZ COMP	RH																
55 ATA					LH								RH				
55 SFA					LH										RH		
55 ETA		RH			LH											RH	
55 ETA R		RH										LH				RH	
55 ATA2							RH							LH			
55 TST2		LH					RH										
55 R		RH										LH					
Z.1 SPORT		RH										LH					
4X WOLRLD CUP			X2						LH								
DIRT JUMPER 1		RH										LH					
DIRT JUMPER 2		RH										LH					
DIRT JUMPER 3	RH																
66 ATA									LH				RH				
66 RC3	RH		LH						LH								
66 RCV		X2									LH						RH
888 ATA WORLD CUP				LH					LH				RH				
888 RC3 WORLD CUP	RH			LH					LH								
888 RC3	RH			LH					LH								
888 RCV		X2									LH						RH
888 RV											LH						
TXC LO			RH					LH		RH							
TXC 1			X2							RH							
TXC 2	LH		RH							RH							

Table 8 - *Forks adjustments*

X2	Adjustment on both legs
RH	Adjustment on right leg
LH	Adjustment on left leg

Table 9 - *Key to table*

5 WARRANTY

5.1 Warranty For Eu Countries

Marzocchi S.p.a. warrants that its suspension system is free from original conformity defects throughout a period of two (2) years from the date of the purchase, in accordance with Directive 99/44/EC. The retail invoice or, if any, the warranty certificate dated and stamped by Marzocchi retailer, enclosed with the product, prove the commencement date of the warranty. In the event of a conformity defect within the aforesaid term, the purchaser should return the product to the Marzocchi retailer where he/she bought it, illustrating the defect and the reasons of the warranty claim. The retailer will inform the purchaser when the product has been repaired or replaced.

5.1.1.1 NOT COVERED: This warranty does not cover non-conformity defects after the purchase, such as damage resulting from accidents, alteration, neglect, misuse, abuse, improper use, improper assembly, improper maintenance, repairs improperly performed, replacement parts or accessories not conforming to Marzocchi S.p.A.'s specifications, modifications not recommended or approved in writing by Marzocchi S.p.A., activities such as acrobatics, stunt jumping, ramp riding, racing, commercial use, competitive use, use in mountain biking or BMX parks, use on BMX trails, and/or normal wear or deterioration occasioned by the use of the suspension system, and, in general, all subsequent non-conformity defects resulting from the non observance of the instructions of the product Use Manual.

This warranty does not cover, as they are not original non-conformities, items and substances subject to normal wear occasioned by use, such as oil, sealing rings, dust seals, and sliding bushes. In addition, this warranty is void in the event that the suspension system is used with rental bicycles. This warranty will be automatically void if the serial number of the Marzocchi suspension system is altered, erased, defaced or otherwise subject to any tampering. Finally, this warranty will not cover second-hand Marzocchi suspension systems and in this case the retailer will offer a warranty for the second-hand product, without liability of any kind, either direct or indirect, of Marzocchi Spa

5.1.1.2 TERRITORIAL LIMITATION: This warranty covers all the products bought in a EU country, except for products bought in a EU country but used in the USA which the clauses of the "Warranty rest of the world – USA included" apply to. Some EU countries set mandatory rules which govern the warranty for consumer goods; should these rules be inconsistent with the terms of this warranty, national mandatory rules shall take precedence.

5.1.2 PURCHASER: This warranty is made by Marzocchi S.p.A. with only the original purchaser of the Marzocchi suspension system, and does not extend to any third parties. The rights of the original purchaser under this warranty may not be assigned.

5.1.3 TERM: The term of this warranty shall commence on the date of purchase and shall continue for a period of two (2) years from the date of the original purchase. Replaced parts have a six (6) month warranty.

5.1.4 PROCEDURE: In the event of a defect covered by this warranty, the purchaser should contact an authorized Marzocchi dealer (or Marzocchi USA).

5.1.5 ENTIRE AGREEMENT: This warranty supersedes any and all oral or express warranties, statements or undertakings that may previously have been made, and contains the entire agreement between the parties with respect to the warranty of this Marzocchi suspension system. Any and all warranties not contained in this warranty are expressly and specifically excluded.

5.1.6 DAMAGES: Except as expressly provided by this warranty, Marzocchi S.p.A. and Marzocchi USA, Inc. SHALL NOT BE RESPONSIBLE FOR ANY INCIDENTAL OR CONSEQUENTIAL DAMAGES ASSOCIATED WITH THE USE OF THE MARZOCCHI SUSPENSION SYSTEM OR A CLAIM UNDER THIS AGREEMENT, WHETHER THE CLAIM IS BASED ON CONTRACT, TORT OR OTHERWISE. The foregoing statements of warranty are exclusive and lieu of all other remedies. Some states do not allow the exclusion or limitation of incidental or consequential damages, so this limitation or exclusion may not apply to you.

5.1.7 DISCLAIMER: ANY IMPLIED WARRANTY OF MERCHANTABILITY OR FITNESS FOR A PARTICULAR PURPOSE AND ALL IMPLIED WARRANTIES ARISING FROM A COURSE OF DEALING, USAGE OR TRADE, BY STATUTE OR OTHERWISE, IS HEREBY STRICTLY LIMITED TO THE TERM OF THIS WRITTEN WARRANTY. This Agreement shall be the sole and exclusive remedy available to the Purchaser with respect to this purchase. In the event of any alleged breach of any warranty or any legal action brought by the purchaser based on alleged negligence or other tortuous conduct by Marzocchi S.p.A., the Purchaser's sole and exclusive remedy will be repair or replacement of the defective materials, as stated above. No dealer and no other agent or employee of Marzocchi S.p.A. is authorized to modify, extend or enlarge this warranty.

5.1.8 WARNING: Always install, repair and use your Marzocchi suspension system in strict compliance with its owner's manual.

5.1.9 OTHER RIGHTS: This warranty gives you specific legal rights, and you may also have rights that may vary from state-to-state.

5.1.10 APPLICABLE LAW: Any disputes arising out of this agreement or the use of this Marzocchi Suspension System will be governed by the laws of the country of Italy and will be decided by the Courts of Bologna, Italy.

5.2 Warranty rest of the world excluding Europe – USA included

If any component of your suspension system is found to be defective in materials or workmanship within the term of this Limited Two Year Warranty (the "Agreement"), the defective component will be repaired or replaced, at the option of Marzocchi S.p.A., free of charge, within thirty (30) days after receipt of the same from an authorized Marzocchi dealer or Marzocchi USA, freight prepaid, together with the original retail invoice or other evidence of the date of purchase.

5.2.1 NOT COVERED: This warranty does not cover damage resulting from accidents, alteration, neglect, misuse, abuse, improper use, lack of reasonable or proper maintenance, improper assembly, repairs improperly performed, replacement parts or accessories not conforming to Marzocchi S.p.A.'s specifications in the Owner's Manual or on the Website www.marzocchi.com, , modifications not recommended or approved in writing by Marzocchi S.p.A., activities such as acrobatics, jumping, stunt riding, ramp riding, racing, commercial use, competitive use, use in mountain biking or BMX parks, use on BMX trails, and/or normal wear or deterioration occasioned by the use of the suspension system. This warranty does not cover items subject to normal wear due to the use of the suspension system, such as for example oil, oil seals, dust seals and bushes. We therefore ask you to check (or have your dealer check) its condition at the moment you purchase the suspension system, as that is the only time that it will be possible to replace such components. In addition, this warranty is void in the event that the suspension system is used with rental bicycles, unless Marzocchi S.p.A provided prior approval in writing for such use. This warranty also does not include any expenses related to the transportation of the Marzocchi suspension system to or from an authorized Marzocchi dealer (or Marzocchi USA), labor costs to remove the Marzocchi suspension system from the bicycle, or compensation for loss of use while the Marzocchi suspension system is being repaired. This warranty will be automatically void if the serial number of the Marzocchi suspension system is altered, erased, defaced or otherwise subject to any tampering. This warranty will be automatically void if the purchaser does not follow all the instructions in the Owner's Manual and in the website www.marzocchi.com.

5.2.2 PURCHASER: This warranty is made by Marzocchi S.p.A. with only the original purchaser of the Marzocchi suspension system, and does not extend to any third parties. The rights of the original purchaser under this warranty may not be assigned.

5.2.3 TERM: The term of this warranty shall commence on the date of purchase and shall continue for a period of two (2) years from the date of the original purchase. Replaced parts have a six (6) month warranty.

5.2.4 PROCEDURE: In the event of a defect covered by this warranty, the purchaser should contact an authorized Marzocchi dealer (or Marzocchi USA).

5.2.5 ENTIRE AGREEMENT: This warranty supersedes any and all oral or express warranties, statements or undertakings that may previously have been made, and contains the entire agreement between the parties with respect to the warranty of this Marzocchi suspension system. Any and all warranties not contained in this warranty are expressly and specifically excluded.

5.2.6 DAMAGES: Except as expressly provided by this warranty, Marzocchi

S.p.A. and Marzocchi USA, Inc. SHALL NOT BE RESPONSIBLE FOR ANY INCIDENTAL OR CONSEQUENTIAL DAMAGES ASSOCIATED WITH THE USE OF THE MARZOCCHI SUSPENSION SYSTEM OR A CLAIM UNDER THIS AGREEMENT, WHETHER THE CLAIM IS BASED ON CONTRACT, TORT OR OTHERWISE. The foregoing statements of warranty are exclusive and lieu of all other remedies. Some states do not allow the exclusion or limitation of incidental or consequential damages, so this limitation or exclusion may not apply to you.

5.2.7 DISCLAIMER: ANY IMPLIED WARRANTY OF MERCHANTABILITY OR FITNESS FOR A PARTICULAR PURPOSE AND ALL IMPLIED WARRANTIES ARISING FROM A COURSE OF DEALING, USAGE OR TRADE, BY STATUTE OR OTHERWISE, IS HEREBY STRICTLY LIMITED TO THE TERM OF THIS WRITTEN WARRANTY. This Agreement shall be the sole and exclusive remedy available to the Purchaser with respect to this purchase. In the event of any alleged breach of any warranty or any legal action brought by the purchaser based on alleged negligence or other tortuous conduct by Marzocchi S.p.A., the Purchaser's sole and exclusive remedy will be repair or replacement of the defective materials, as stated above. No dealer and no other agent or employee of Marzocchi S.p.A. is authorized to modify, extend or enlarge this warranty.

5.2.8 WARNING: Always install, repair and use your Marzocchi suspension system in strict compliance with its owner's manual.

5.2.9 OTHER RIGHTS: This warranty gives you specific legal rights, and you may also have rights that may vary from state-to-state.

5.2.10 APPLICABLE LAW: Any disputes arising out of this Agreement or caused by the use of the Marzocchi suspension system will be governed by the laws of the State of California, and will be decided by the Courts of Bologna, Italy.

Giugno - 2007 - Ed. 01

MARZOCCHI S.p.A.
[PHYSICAL] VIA GRAZIA, 2
40069 ZOLA PREDOSA
BOLOGNA, ITALIA
[TEL] +39.051.6168.711
[FAX] +39.051.758857

MARZOCCHI USA
[PHYSICAL]
28476 WESTINGHOUSE PLACE
VALENCIA, CALIFORNIA 91355
[TEL] 661.257.6630
[FAX] 661.257.6636

MARZOCCHI ASIA
[PHYSICAL] 25F-A2, N°760
CHUNG MING SOUTH ROAD
TAICHUNG, TAIWAN, R.O.C.
[TEL] +886.4.22634.382
[FAX] +886.4.22634.380

WWW.MARZOCCHI.COM
DEVELOPED IN ITALY

Cod. 9001282