MARZOCCHI SUSPENSION 07

It's hard to believe that ten years have gone by since our debut of the Bomber fork line. Some said that we were crazy to offer 4" of travel in a single crown fork and that it was too much travel. Some said that we shouldn't make a freeride fork and there's no market for it. They were wrong.

Thanks to the legends of the sport such as Tippie, Richie, Wade, and Tarek, we're still building premium suspension products based on their feedback and support. Marzocchi was there at the paradigm shift and now, what was once ludicrous, is the industry standard. 2007 brings you even more ideas from outside the box. From fork technology to even the graphics, we continue to raise the bar and push the limits. We make suspension for every genre of riding so there's a Marzocchi that's right for you. Go with the original. Ride Marzocchi.

MARZOCCHI 2007

SPANGLER

DUNNE

COWAN

DYER

GRACIA

SIMMONS

VANDERHAM

SCHLEY

BAREL

SOUL RIDER

BASAGOITIA

LEECH

BOURDON

LOPES

WATSON

MARZOCCHI
2007MODELS

OUR CREW OF RIDERS REPRESENT SOME OF THE BEST RIDERS IN MOUNTIAN BIKING. WE SUPPORT OUR PROFESSIONAL ATHLETES IN EVERY DISCIPLINE OF RIDING, SUCH AS FREERIDING, DIRT JUMPING, DOWNHILL RACING, URBAN PARK RIDING, MARATHON RACING AND EVEN RIDING TRAILS. ALL OF THESE RIDERS HAVE TWO THINGS IN COMMON, A LOVE FOR THE SPORT AND MARZOCCHI SUSPENSION. WE HAVE SUPPORTED THE MOUNTAIN BIKING SCENE SINCE THE BEGINNING. OUR QUALITY SUSPENSION SHOWS A COMMITMENT TO THE SOULRIDERS AS WELL AS ANY RIDER WHO WANTS THE BEST IN MOUNTIAN BIKING SUSPENSION.

MARZOCCHI® TECH

TST
TERRAIN SELECTION TECHNOLOGY

TST 5 & TST 2 Takes the guess work out of finding the perfect compression setting to perfectly match the terrain and riding style. Finding the right compression feel is a hard adjustment to define since a single ride has a multitude of terrain changes, TST can offer on the fly adjustability.

TST 5 offers:
- 5 indexed compression settings on top & rebound control on the bottom.
- Takes the guess work out finding the perfect compression feel.
- Settings range from fast descending (DH) thru free ride (FR) all the way to lock-out (CL) for extended climbs.
- Position sensitive compression control.
- Sophisticated lightweight re-buildable bladder/cartridge system.
- Closed cartridge design eliminates performance fade.
- Larger oil volume for life long reliability.
- Top mounted CNC adjuster.

TST 2 Offers:
- 2 compression settings on top with the rebound adjuster on the bottom.
- Settings range from fast descending (DH) and total lock-out for extended climbs.
- Position sensitive compression control.
- In-between settings offer same damping control like TST 5
- Sophisticated rebuildable lightweight cartridge system.
- Closed cartridge design eliminates performance fade.
- Larger oil volume for life long reliability.
- Top mounted CNC adjuster

RC2X
RC2X WITH VOLUME ADJUST

The RC2X system is the undisputed king of suspension technology that's been proven many times over by the best racers and free riders in the world. This system offers speed sensitive rebound control and independent high speed compression control. The position sensitive rebound and low speed adjuster are located on top each fork leg while the position sensitive high speed adjuster is on the bottom of the leg. The RC2X system has a one of a kind volume adjustment where spring preload and internal air volume/oil volume is simultaneously adjusted. In essence, you can preload the fork to adjust sag while fine tuning the end of the forks travel for precise bottom out control. Last but not least, this fork is a complete "Open Bath System" which is the key to life long durability. A little bit more oil goes a long way; don't be fooled by oil splash technology.

RC2
RC 2 WITH VOLUME ADJUST

The RC2 system delivers the same cutting edge technology as the RC2X system but without low-speed compression adjustability. While still retaining the independent speed sensitive rebound and high speed compression control. The RC2 also incorporates the Volume Adjust feature where external preload and air/oil volume can be adjusted with a simple turn of a knob. With top mounted CNC adjusters, dialing in your fork to meet any riding condition is easy accomplished.

VA
VOLUME ADJUST

VA The 888 RC2X and 888 RC2 models are the only forks on the market to offer Volume Adjust technology. VA simultaneously adjusts the preload of the fork springs to set the SAG while at the same time reducing or increasing the air/oil chamber. The VA adjustment is accomplished by a separator that moves up or down with the preload adjuster, this separator either increases or decreases the air/oil chamber. Simply put, it's like adding or decreasing the oil volume to control the bottom out resistance with a simple turn of a top mounted CNC knob. Now that's technology.

SFA
SINGLE FUNCTION AIR

SFA stands for "Single Function Air" technology that offers the lightest air system we've ever designed without compromising performance or reliability. SFA functions in the same technical manner as the ATA air system but without Travel Adjustment. Both air spring preload and bottom out control are adjusted via external schraeder air valves and TST 5 dials in the compression and rebound adjustment is regulated at the bottom of the fork leg.

ETA
EXTENSION TRAVEL ADJUST

ETA is the most widely used travel adjustment feature today. No other fork on the market today offers such an easy on-the-fly axle to crown adjustment like the ETA system. With a simple turn of a top mounted CNC knob, the fork's travel can be reduced by the rider pre-compressing the fork or simply settling in as you ride. For example, climbing on a 160mm travel fork pushes your body position back making it harder to get over the front of the bike for better and more comfortable pedaling efficiency. With ETA, the fork's length can be reduced down to 100mm (more or less) bringing your body position back over the front of your bike so you don't feel like your climbing on a chopper. For soaking up the small bumps while the ETA is activated, 30mm of travel remains no matter where you are in the travel, and when you reach the top of your climb, flick the knob and your fork returns to its full travel amount.

RCV
REBOUND COMPRESSION VALVE

The RCV damping system offers external rebound and compression control via an external adjuster at the bottom of each fork leg. The all alloy RCV piston valves sit in a total Oil Bath delivering proven durability and reliability that only a Bomber Open Bath system can provide. We set the bench mark with our Oil Bath Technology and the competition are still trying to catch us, don't be fooled by oil splash designs!

The RV technology is similar to the RCV design excluding the compression adjustment. The RV is a speed sensitive all alloy rebound valve that can be externally adjusted for that perfect rebound speed. The RV valve design is a highly sophisticated damping system that that sits in a complete oil bath delivering the utmost in reliability and durability.

ATA
AIR TRAVEL ADJUST

40 MM
TRAVEL ADJUST

ATA stands for "Air Travel Adjust" and it's a totally new air system for 2007!

The all new ATA air system breaks down the performance requirements that's always held back today's typical air systems. To accomplish this, we've separated both the top and bottom air chambers to be independently controlled and adjusted for amazing small bump sensitivity with precision tuning bottom out control.

Why separate the two chambers?

With single air chamber designs, the job of controlling both the positive and negative air transfer, while providing bottom out pregressivity, is an impossible task. That's why standard air systems are either too harsh or too soft and overall performance is compromised. With the all new ATA air system with the Progressive Air Resistance Chamber, both the top and bottom chambers can be easily & precisely adjusted delivering unheard of performance in both the initial feel and at the end of the stroke progressiveness. The 2007 ATA system delivers true coil like feel with incredible small bump sensitivity while having the progressive compression feel just like a coil fork.

The main air chamber can be preloaded to adjust for SAG and initial small bump sensitivity.

The bottom PAR chamber exactly adjusts where you want the end of the travel progressiveness to kick in controlling bottom out.

Both chambers can be easily adjusted via external schraeder air valves located at the top and bottom of the fork legs.

ATA also has that added bonus of 40mm of travel adjustment. By turning a top mounted knob, 40mm of travel can be easily changed allowing for the perfect front and rear suspension set-up. ATA can also be used to reduce the front end height making steep climbs easier (like ETA) by repositioning your body forward.

3 MECHANICAL TRAVEL ADJUST 40 mm

2 MAIN CHAMBER
Main air chamber sets sag / spring rate / sensitivity

1 SECONDARY CHAMBER
Progressivity of compression depends on bottom chamber pressure

MARZOCCHI
2007MODELS

RIDER CLASSIFICATION

FORKS SHOULD BE USED ONLY WITH PROPER BRAKES, AS WELL AS FRAMES, WHEELS AND OTHER COMPONENTS SPECIFICALLY DESIGNED FOR THE RIDING STYLE. THE BRAKES MUST BE ATTACHED TO THE DESIGNATED MOUNTING POINTS PROVIDED ON THE FORK. NEVER MAKE ANY MODIFICATION TO YOUR FORK TO ATTACH ANY EQUIPMENT.

DON'T BE A FORK ABUSER! Marzocchi suspension forks are among the most durable and technologically advanced forks on the market today. However, no fork can withstand misuse, abuse or improper use that can cause the forks to fail.

It is critical that you equip your frame with a fork that is appropriate for the frames' anticipated riding style. Please see Marzocchi's Intended Use Chart which identifies the correct forks for various riding styles.

Failure to properly match the forks to your frames could cause the forks to fail, resulting in a loss of bicycle control and, possibly, serious injury to the rider. In addition, an improper match will void your forks' warranty. Choose wisely!

XC

Cross country riding is along hilly trails where some bumps and smaller obstacles, such as rocks, roots or depressions, may be encountered.

AM

All mountain riding consists of XC riding and larger obstacles and smaller jumps.

4X

Fourcross is a "BMX" style of riding for the most skilled riders and involves racing down a track consisting of jumps and berms made from mounds of dirt which the rider must negotiate by jumping or turning at speed.

DJ

Dirt jumping is a "BMX" or "motocross" style riding for the most skilled riders. It involves jumping from one mound of dirt to another. It also includes riding over and around "urban obstacles" such as man-made or other concrete structures.

FR

Freeriding involves aggressive slopes, large obstacles and moderate jumps.

DH/FRX

The downhill and freeride extreme discipline is only for professional or highly skilled riders. It includes relatively high jumps or "drops" and negotiating larger obstacles such as boulders, fallen trees or holes.

FORK NAME	XC	AM	4x	FR	DJ	DH	FRX
CORSA SL WORLD CUP	•						
XC SL 700	•						
XC SL 600	•						
XC 700	•						
XC 600	•						
MX PRO ETA	•						
MX PRO	•						
ALL MOUNTAIN SL 1	•	•					
ALL MOUNTAIN 2	•	•					
ALL MOUNTAIN 3	•	•					
Z.1 LIGHT ETA	•	•	•	•			
4X WORLD CUP	•		•				
DIRT JUMPER 1			•		•		
DIRT JUMPER 2			•		•		
DIRT JUMPER 3			•		•		
66 SL 1 ATA				•		•	•
66 RC2X				•		•	•
66 RC2 ETA		•		•		•	•
888 SL ATA						•	•
888 RC2X WORLD CUP						•	•
888 RC2X VA						•	•
888 RCV						•	•
SUPER T RCV						•	•

2007 FORK MODELS

MARZOCCHI

2007MODELS

CORSA

corsa series

We're serious about cross country. The Corsa shows our commitment to this segment of the sport. It's entirely new from the ground up and built to race. The Corsa is ultra light and comes with our TST 5 technology and remote. The TST 5 provides 5 settings of compression which can be adjusted on the fly according to the terrain. On race day the Corsa is your winning edge.

CORSA SL WC

- 80mm or 100mm Travel
- TST 5 & SFA Adjustability
- Air Spring
- Alloy XC Steer Tube & Crown
- 32mm Nickel Coated Alloy Tapered Stanchions
- V-Brake
- 6" Post Mount (Max Disc 6")

Additional Features:
- Remote TST Control

RATED FOR XC

TST 5 SFA

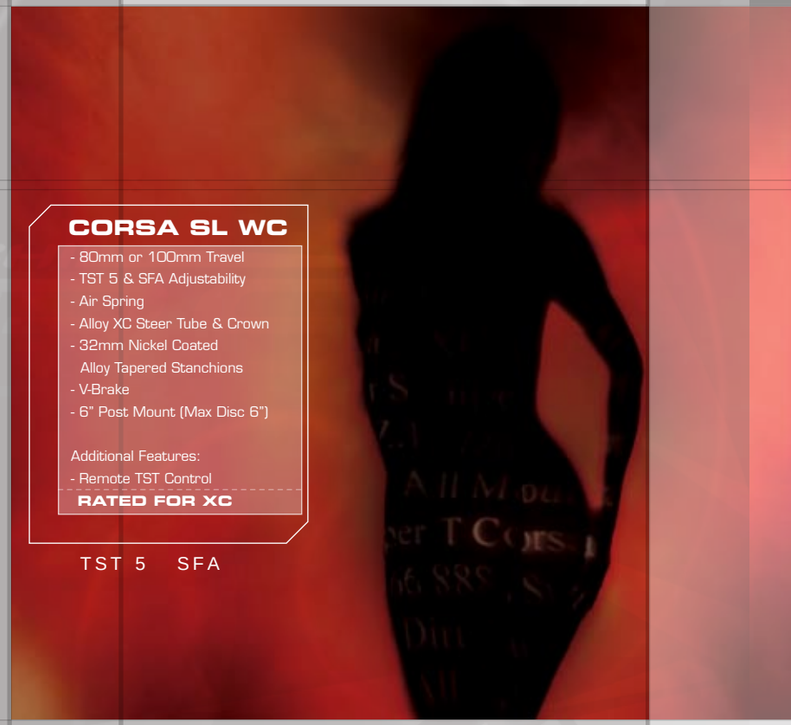

MARZOCCHI

2007MODELS

cross-country series

The XC Retro series pays homage to the rich history and heritage of our first XC suspension forks. We've taken it into the next millennium by creating a light, highly adjustable fork that's perfect for the marathon and XC racing scene. The XC Retro series features 32mm stanchion tubes, new slider design, and a new air travel adjust system (ATA). ATA lets the user adjust ride height up to 40mm in just 8 turns of the dial. The XC Retro is a rebirth of Marzocchi cross country dominance.

XC 700 SL

- 90mm to 130mm Travel
- TST 5 & ATA Adjustability
- Air Spring
- Alloy XC Steer Tube & Crown
- 32mm Nickel Coated Alloy Tapered Stanchions
- V-Brake
- 6" Post Mount (Max Disc 7")

RATED FOR XC

TST 5 ATA

XC 600

- 100mm or 130mm Travel
- RV & ETA Adjustability
- Coil w/ Air Assist Spring
- Alloy XC Steer Tube & Crown
- 32mm Alloy Stanchions
- V-Brake
- 6" Post Mount (Max Disc 7")

Additional Feature:

- ETA Remote Control

RATED FOR XC

RV ETA

XC 500

- 100mm Travel
- TST 2 Adjustability
- Air Spring
- Alloy XC Steer Tube & Crown
- 32mm Alloy Stanchions
- V-Brake
- 6" Post Mount (Max Disc 7")

RATED FOR XC

MARZOCCHI

2007MODELS

Our MX series fits the rider who wants a fork with an aggressive XC damping and yet maintain a lightweight feel. The MX delivers consistent, predictable handling under various trail conditions.

The TXC is a light functional fork that's perfect for the short day trip or the trek to a surrounding town. The magnesium lowers feature fender mounts and a dynamo generator mount. We've taken some of the best technology in our Bomber line and created a fork that's specific to trekking.

MARZOCCHI

2007MODELS

MX

MX PRO ETA

- 100mm Travel
- RV & ETA Adjustability
- Air Spring
- Alloy XC Steer Tube & Crown
- 30mm Alloy Stanchions
- V-Brake
- 6" Post Mount (Max Disc 7")

RATED FOR XC

RV ETA

MX PRO

- 85mm or 100mm Travel
- RV Adjustability
- Air Spring
- Steel Steer Tube & Crown
- 30mm Alloy Stanchions
- V-Brake
- 6" Post Mount (Max Disc 7")

RATED FOR XC

ETA

TXC

TXC ECC

- 80mm Travel
- RV & ECC Adjustability
- Air Spring
- 300mm Alloy Steer Tube & Crown
- 28mm Alloy Stanchions
- V-Brake
- INTL STD D-Brake

RATED FOR TK

RV ECC

TXC 1

- 60mm Travel
- RV Adjustability
- Air Spring
- 300mm Alloy Steer Tube & Crown
- 28mm Alloy Stanchions
- V-Brake
- INTL STD D-Brake

RATED FOR TK

RV

TXC 2

- 60mm Travel
- RV Adjustability
- Air Spring
- 300mm Steel Steer Tube & Crown
- 28mm Alloy Stanchions
- V-Brake
- INTL STD D-Brake

RATED FOR TK

RV

ALL MOUNTAIN SL 1

- 120mm to 160mm Travel
- TST 5 & ATA Adjustability
- Air Spring
- Alloy FR Steer Tube & Crown
- 32mm Alloy Stanchions
- 6" Post Mount (Max Disc 8")

Additional Feature:
- QR20 Drop Outs
  & Quick Release Axle

RATED FOR AM

TST 5 ATA

ALL MOUNTAIN 2

- 160mm Travel
- RV & ETA Adjustability
- Coil w/ Air Assist Spring
- Alloy FR Steer Tube & Crown
- 32mm Alloy Stanchions
- 6" Post Mount (Max Disc 8")

Additional Features:
- QR20 Drop Outs
  & Quick Release Axle

RV ETA

ALL MOUNTAIN 3

- 140mm Travel
- TST 2 Adjustability
- Coil w/ Air Assist Spring
- Alloy FR Steer Tube & Crown
- 32mm Alloy Stanchions
- 6" Post Mount (Max Disc 8")

RATED FOR AM

TST 2

We built the All Mountain to conquer the entire mountain. It's a balanced fork that shines on both the climb and the descent. The All Mountain is chocked full of features such as ATA and TST, but is still one of the lightest long travel single crown forks on the mountain. This is the perfect utility fork for the bike that does it all.

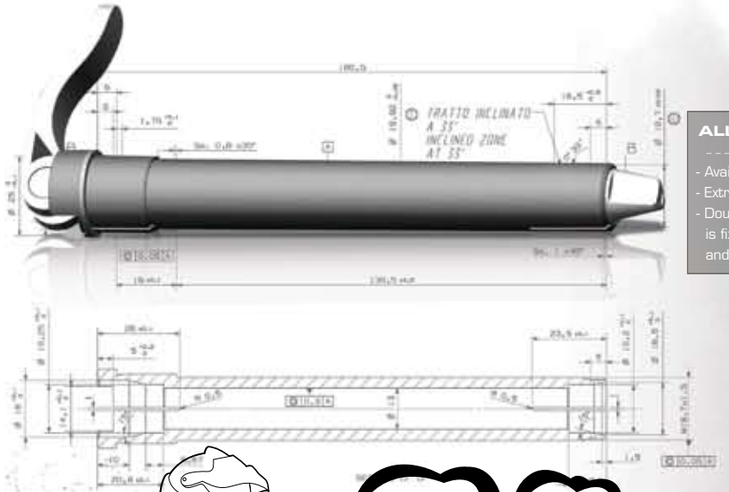

ALL NEW QR 20 AXLE

- Available on the All Mountain
- Extremely rigid setup
- Double Expansion means that it is fixed on both ends so the fork and axle work as a solid unit.

all mountain

MARZOCCHI

2007MODELS

Mariela D.
MARZOCCHI
2007MODELS
66

Z.1 SERIES

Happy Birthday Bomber! This is the fork that changed the way people look at mountain bike suspension. The Z.1 was the springboard for all the incarnation of forks in the Bomber line. In honor of that we bring the Z.1 with retro paint and decal scheme and all the latest technology Marzocchi has to offer.

Z.1 RC2 ETA

- 150mm Travel
- RC2 & ETA Adjustability
- Coil Spring
- Reinforced Alloy Steer Tube & Crown
- 32mm Alloy Stanchions
- INTL STD D-Brake

Additional Feature:
- 20mm Drop Outs W/ Bolts & Axle

RATED FOR FR

RC2 ETA

MARZOCCHI

2007MODELS

4X

fourcross series

BRIAN LOPES

4X WORLD CUP

- 110mm Travel
- RV Adjustability
- Coil w/ Air Assist Spring
- Alloy FR Steer Tube & Crown
- 32mm Alloy Stanchions
- 6" Post Mount (Max Disc 8")

Additional Feature:
- 20mm Drop Outs
  W/ Bolts & Axle

RATED FOR 4X

RV

We've got some of the best 4X racers in the world, so why not build a fork to showcase their talents? We used their input to create a fork that's durable in the whoops and inspires confidence in the jumps. From the starting gate to the finish line, this fork is a performer.

MARZOCCHI

2007MODELS

DIRT JUMPER

DIRT JUMPER 1

- 100mm Travel
- RCV Adjustability
- Coil Spring
- Reinforced Alloy Steer Tube & Crown
- 32mm Alloy Stanchions
- INTL STD D-Brake (Max Disc 8")
- Pinch Bolt Crown

Additional Feature:
- 20mm Drop Outs W/ Bolts & Axle

DIRT JUMPER 2

- 100mm Travel
- RV Adjustability
- Coil Spring
- Reinforced Alloy Steer Tube & Crown
- 32mm Alloy Stanchions
- INTL STD D-Brake (Max Disc 8")
- Pinch Bolt Crown

Additional Feature:
- 20mm Drop Outs W/ Bolts & Axle

DIRT JUMPER 3

- 100mm Travel
- RV Adjustability
- Coil Spring
- Reinforced Alloy Steer Tube & Crown
- 32mm Alloy Stanchions
- INTL STD D-Brake (Max Disc 8")
- Pinch Bolt Crown

Additional Feature:
- 20mm Drop Outs W/ Bolts & Axle

- Also Available with 9mm Standard Axle

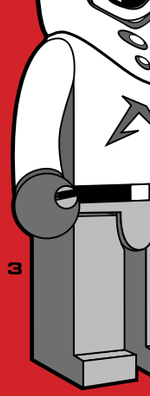

go paul

DJ

DIRT JUMPER

For some mountain bikers, riding is measured by the time from one jump to the next. The Dirt Jumper is for the rider who spends more time in the air than on the trail. Our DJ line continues to progress along with the new tricks and riders emerging onto the scene. The DJ line now features a pinch bolt crown and external rebound adjustment. If you're acrophobic, don't even bother.

MARZOCCHI

2007MODELS

66 SL 1 ATA

- 140mm to 180mm Travel
- RC2 & ATA Adjustability
- Air Spring
- Reinforced Alloy Steer Tube & Crown
- 35mm Alloy Tapered Stanchions
- 6" Post Mount (Max Disc 8")

Additional Feature:
- 20mm Axle

RATED FOR FRX

RC2 ATA

66 RC2X

- 180mm Travel
- RC2X Adjustability
- Coil Spring
- Reinforced Alloy Steer Tube & Crown
- 35mm Alloy Tapered Stanchions
- 6" Post Mount (Max Disc 8")

Additional Feature:
- 20mm Axle

RATED FOR FRX

RC2X

66 RC2 ETA

- 180mm Travel
- RC2 & ETA Adjustability
- Coil Spring
- Reinforced Alloy Steer Tube & Crown
- 35mm Alloy Stanchions
- 6" Post Mount (Max Disc 8")

Additional Feature:
- 20mm Axle

RATED FOR FRX

RC2 ETA

66 RV

- 180mm Travel
- RV Adjustability
- Coil Spring
- Reinforced Alloy Steer Tube & Crown
- 35mm Alloy Stanchions
- 6" Post Mount (Max Disc 8")

Additional Feature:
- 20mm Axle

RATED FOR FRX

RV

The 66 is the long travel single crown fork that many try to imitate but none can duplicate. This fork delivers with function and technology. This year we've integrated the all new ATA system into the fork as well as ETA in case you need to climb instead of shuttle your closest trail. Progressive riders demand a fork that works on the big drops with the freedom of a single crown. The 66 is the only choice.

888 SL ATA

- 170mm to 200mm Travel
- RC2 & ATA Adjustability
- Air Spring
- Alloy Steer Tube & Crown
- 35mm Alloy Stanchions
- 6" Post Mount
  (Max Disc 8")

Additional Feature:
- 20mm Axle

RATED FOR DH

RC2 ATA

888 RC2X WC

- 200mm Travel
- RC2X & VA Adjustability
- TI Springs K3.1
  Or TI Springs K3.5
- Alloy Steer Tube & Crown
- 35mm Nickel Coated
  Alloy Stanchions
- 6" Post Mount
  (Max Disc 8")

Additional Feature:
- 20mm Axle

RATED FOR DH

RC2X VA

888 RC2X VA

- 200mm Travel
- RC2X & VA Adjustability
- Coil Spring
- Alloy Steer Tube & Crown
- 35mm Alloy Stanchions
- 6" Post Mount
  (Max Disc 8")

Additional Feature:
- 20mm Axle

RATED FOR DH

RC2X VA

888 RCV

- 200mm Travel
- RCV Adjustability
- Coil Spring
- Alloy Steer Tube & Crown
- 35mm Alloy Stanchions
- 6" Post Mount
  (Max Disc 8")

Additional Feature:
- 20mm Axle

RATED FOR DH

RCV

SUPER T RCV

- 185mm Travel
- RCV Adjustability
- Coil Spring
- Alloy Steer Tube & Crown
- 32mm Alloy Stanchions
- 6" Post Mount
  (Max Disc 8")

Additional Feature:
- 20mm Drop Outs
  W/Bolts & Axle

RATED FOR DH

RCV

The Super T and 888 represent the heart of Marzocchi's freeride and downhill line. The 888 is the choice for some of the best freeriders and racers on the circuit. Fabien Barel's earned two world championships on the 888 and the 888's garnered accolades in some of the biggest freeride contests. We infused the ATA system into the 888 as well as Titanium springs and Nickel coated stanchions on the World Cup. The end result is the lightest most effective 888 we've ever put on the market. For race or freeride you're covered on a Marzocchi.

MARZOCCHI

2007MODELS

super

888

The inspiration for the design of the ROCO® came from the riding the harsh conditions of the Whistler MTB Park, summer home to the Marzocchi® Research & Development Team. Obviously, our first design parameter was a shock that can withstand the harsh trail and weather conditions that Whistler can deliver day by day. From the top of Garbonzo down, you're engaged in slippery muddy roots, tight rocky 90 degree turns, and head high drops. Then onto the lower part of the mountain, A-Line & Dirt Merchant launch you onto countless high speed jumps & turns. After completing this 20 minute test run, you turn around and do it again and again. After a summer of riding you accumulate about a million vertical feet of testing, now that's what Marzocchi testing is all about.

With this in mind, the feel of the ROCO needed to handle a wide range of terrain demands while keeping the rear wheel active on the ground. The ROCO also needed to take on the big hits without getting "bucked" or bottoming out; Active suspension with big bump capability became the obsession and after a summer of testing we accomplished our goal. But, we also wanted to develop an industry first, to offer a rear shock that was easily serviceable without the need to send it back to the manufacturer or a main service center.

ROCO

The ROCO**TST R** (Terrain Selection Technology) is designed to match the TST feature found in the front forks. With a simple switch of a lever, you can change the amount of damping from free flowing (DH setting) to restricted flow (CL climbing setting). The TST system is designed as a variable damping system so any in between settings can be used. When the ROCO TST is paired up with an AM SL 1 with TST, you essentially make a long travel bike climb like XC racer.

The ROCO**RC WORLD CUP** was the first generation ROCO that was designed for the varying demands of Whistler and obviously, we had one of the best racers/rider in the world help test it, Cedric Gracia. He was the first to bring it to the World Cup DH circuit along with the occasional slope style event, he took a big risk riding a new product at such a high level, but we didn't let him down, the ROCO delivered and so did Cedric. He proved its reliability and durability and he's still racing and riding it today with great success. Now, the best Free Riders & races in the World are on them, Wade Simmons, Thomas Vanderham, Richie Schley, Cedric Gracia, Brian Lopes, John Cowan, Paul Basagoitia, Garreth Dyer, Randy Spangler, Anne Caroline Chausson, Nicco Vieloue, and many others.

Both ROCO WC & TST bushing and mounting hardware are interchangeable with most shocks on the market. In most cases only the ROCO damper is needed making getting onto a ROCO that much easier!

All 2007 Mounting is 3 pc. stainless steel w/ alloy spacers.

The ROCO**R AIR** is a new rear shock for Marzocchi and developed with the same design goals as the ROCO coil but in an air system. The ROCO air incorporates a uniquely designed a hydraulic system that delivers small bump sensitivity while still handling the big stuff. Cedric Gracia & Brian Lopes were instrumental in fine tuning the ROCO air to handle the heat of Slope Style Competitions and World Championship Four Cross (4X) Racing. Its light, durable, can be used in any type of riding conditions, and it will definitely change the feeling of how your bike should ride.

	features	options	intended usage	available lengths
ROCO**RC WORLD CUP**	HSCV	Titanium Spring	XFR/DH	241.3 x 76.2mm
	High Speed Compression		XFR/DH	228.6 x 70mm
	Rebound		XFR/DH	222 x 70mm
	Preload		XFR/DH	215.5 x 63.5mm
	Alloy Shaft/Alloy Body		XFR/DH	200 x 57mm
ROCO**TST R**	TST	Titanium Spring	XFR/DH	215.5 x 63.5mm
	Terrain Selection Technology		XFR/DH	222 x 70mm
	Rebound		FR/AM	200 x 57mm
	Preload		FR/AM	190.5 x 50mm
	Alloy Shaft/Alloy Body			
ROCO**R AIR**	Rebound		XFR/AM	215.5 x 63.5mm
			XFR/AM	200 x 57mm
			FR/AM	200 x 50mm
			FR/AM	190.5 x 50mm
			FR/AM	165.1 x 38.1mm

XC = Cross-Country AM = All Mountain
FR = Freeride XFR = Extreme Freeride DH = Downhill

ROCO DETAILS

Roco RC World Cup (Alloy Body, Alloy Shaft)

Roco WC & TST Rebound Adjust W/ Clicker

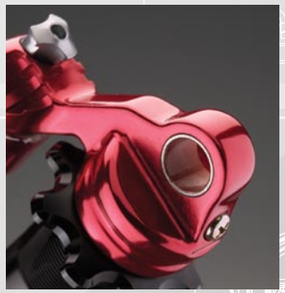

1/2" DJ Bushing Compatible W/ Most Other Shocks

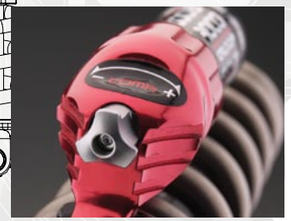

Roco RC World Cup features (HSCV) High Speed Compression System.

Pressure Adjustment For Added Bottoming Resistence (180 - 220 psi)

Roco TST (Terrain Selection Technology)

Roco R Air Rebound & Main Air Spring Adj.

MARZOCCHI

2007MODELS

TIRES

Other than the front fork, tires are the extension of a bikes suspension. The Marzocchi tire is a perfect complement to our suspension. It's available in a 2.3" and 2.6" size and comes optional with our softer D40 compound.

We've got everything you need to keep your fork in proper working order. Keep things running smoothly by using genuine Marzocchi spare parts for all your fork repair and maintenance.

SPARE PARTS

1 Preload knob
2 Allen bolt
3 Stop ring
4 O-ring
5 Plug unit
6 External preload adjuster
7 O-ring
8 External preload adjuster
9 Washer
10 Screw
11 Cable guide
12 Dust seal
13 Stop ring
14 Oil seal
15 Upper bushing
16 Lower bushing
17 Oil seals
18 Bushings
19 Monolite
20 Decals
22 O-ring
23 Foot nut unit
27 Piston ring
28 Pumping rod
29 Rebound spring kit
30 Ferrule unit

31 Foot buffer
32 Preload sleeve
33 Springs kit
34 Buffer
35 Springs kit
36 Screw
37 Upper crown
38 Stanchion tube
40 Cartridge
41 External preload adjuster
42 Lock nut
43 O-ring
44 O-ring
46 Lower crown & alloy stem
47 Lower crown
50 Stop ring
51 Washer
52 Screw
55 Fender kit
56 Fender bushings
57 Fender screw
59 Rebound spring washer
60 Screw
61 RH clamp kit
62 LH clamp kit
63 Nut
64 Lever kit
65 Nut
66 Anchor kit

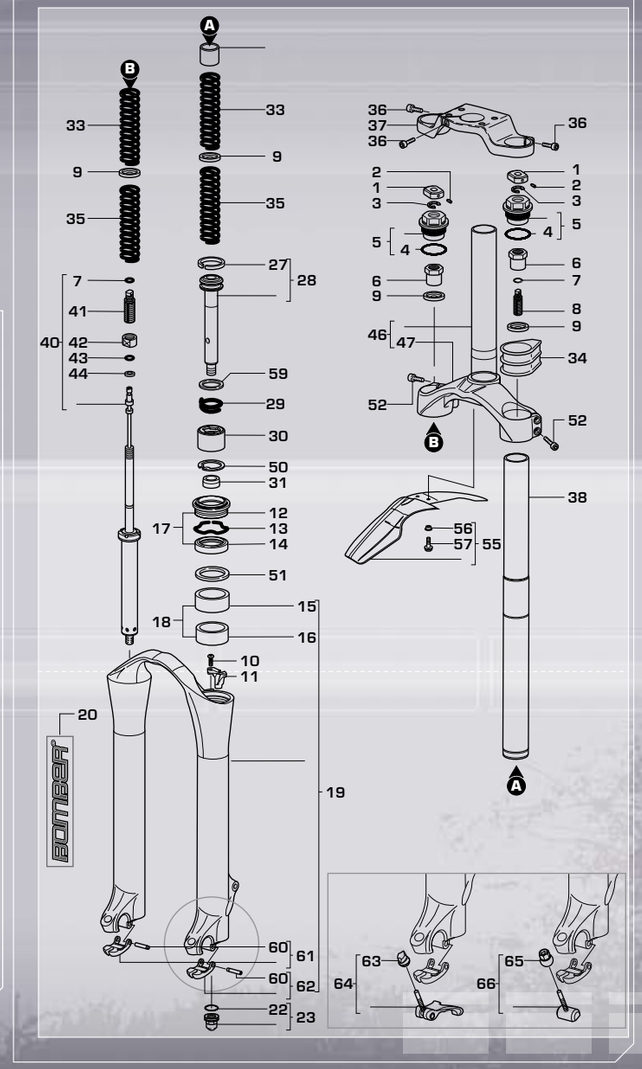

BOMBER SHOE

Now you can be covered from head to toe with Marzocchi. The Bomber shoe is co-branded with 5.10 and has the famous Sticky Rubber sole to keep you locked onto your pedals.

FEATURES

- White Leather Upper and tongue
- Black Mesh Panels for breathability
- Durable re-enforced Eyelets
- 5.10 Sticky Rubber Sole
- TPR M Patches
- Skate Inspired Style

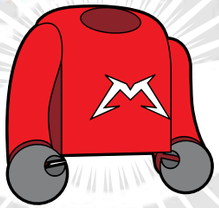

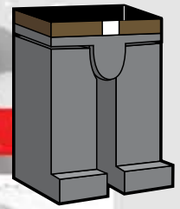

MARZOCCHI

2007MODELS

1. Bomber Zip Up 2. Marzocchi Zip Up 3. Shredder Hoodie 4. Marzocchi Dickies Jacket 5. Bomber Tech Shirt 6. Racer Freeride Jersey 7. Tech Apron 8. FR Gloves 9. Death To Invaders 10. Soulriders 11. 888 Bling 12. Trailer 13. Bomber Rockstar 14. Moto M 15. 888 Box 16. Repeater T 17. Pink M 18. Bomber Girl 19. Butter T 20. Skull and Forks Bones 21. Wool Sox 22. Dirty M Sox 23. M Saddle 24. High Roller Wallet, Rubber Patch, Marzocchi Red Patch 25. DH Shorts 26. Water Bottle, Pelsner Glass, Coffee Mug 27. Gear Bag, Laptop, Backpack 28. Spanky Beanie 29. Scribble Hat 30. 888 Mesh LTD 31. Team Rider 32. Factory Rider

MARZOCCHI 28476 WESTINGHOUSE PLACE • VALENCIA, CA 91355 • [TEL] 661-257-6630 [FAX] 661-257-6636

WARNING: THIS CATALOG DEPICTS PROFESSIONAL RIDERS UNDER STRICTLY CONTROLLED CONDITIONS WITH ALL NECESSARY SAFETY EQUIPMENT. DO NOT ATTEMPT ANY OF THE STUNTS OR OTHER RIDING MANEUVERS SHOWN IN THIS AD. FAILURE OF A COMPONENT OF YOUR BICYCLE COULD OCCUR, RESULTING IN AN ACCIDENT OR SERIOUS PERSONAL INJURY. PLEASE BE SURE TO SELECT AND USE YOUR MARZOCCHI FORKS IN STRICT COMPLIANCE WITH THE WARNINGS AND INSTRUCTIONS PROVIDED IN THE OWNER'S MANUAL. SPECIFICATIONS AND PRICING SUBJECT TO CHANGE WITHOUT NOTICE.