BOMBER 04

OWNERS MANUAL

DEVELOPING SINCE 1949

General warnings for owners manual

WARNING

Failure to follow these instructions could result in failure of the product, an accident, personal injury or death.

1. USE OF THE MANUAL

- Carefully read, follow and understand the instructions given in this manual. It is an essential part of the product, and you should keep it in a safe place for future reference.
- If the use and maintenance instructions provided in this manual are not properly performed, or if the other instructions in this manual are not followed, an accident could occur, resulting in an accident, serious injury or death.
- Please be advised that suspension system installation and repair requires specialized knowledge, tools and experience. General mechanical aptitude may not be sufficient to properly install or repair your suspension system. Please have your suspension system installed and/or serviced only by an authorized Marzocchi Service Center.
- Never make any modification whatsoever to any component of your suspension system.

A. GENERAL SAFETY RECOMMENDATIONS

- Be sure to use the correct suspension system for your style of riding. Check the “Intended Use Instructions” in this manual.
- Please note that there are inherent risks associated with downhill, free ride, cross country, marathon, trekking, dirt jumping and urban style riding. You could be seriously injured or killed while engaged in those riding styles. Learn how to ride, never ride beyond your capabilities, be sure to use the proper safety equipment, and be sure that all your riding equipment is in excellent condition.
- The lifespan of Marzocchi products depends on many factors, such as riding style and riding conditions. Impacts, falls, improper use or harsh use in general may compromise the structural integrity of the suspension system and significantly reduce its lifespan. Please have your bicycle regularly inspected by a qualified mechanic for any oil leaks, cracks, deformation, or other signs of fatigue. The frequency of inspection depends on many factors; check with your authorized Marzocchi representative to select a schedule that is best for you. If the inspection reveals any deformation, cracks, impact marks, stress marks or bent parts, no matter how slight, immediately have a Certified Marzocchi Repair Center inspect the forks before you ride again.
- When installing or removing your bicycle from a bicycle carrier (roof rack or rear hitch mount), be sure that you fully loosen the quick release fastener on the carrier. In addition, be sure that your bicycle is lifted from or installed on the carrier in a perfectly vertical direction. If the quick release fastener is not fully loosened, or if there is any bending action while installing or removing your bicycle, you will scratch, bend or otherwise damage your suspension system.
- If you strike at any speed any overhead object, such as a parking garage, bridge, tree limb or other abutment, with your bicycle while your bicycle is attached to a bicycle carrier, you can damage your forks. Have your forks inspected by an authorized Marzocchi Service Center before you ride.
- Always wear a properly fitted and fastened bicycle helmet that has been approved by ANSI or SNELL, and any other safety equipment necessary for your riding style.

B. BEFORE EVERY RIDE

- Check that none of the components to your suspension system, or the remainder of your bicycle, are bent, deformed, cracked or otherwise damaged.
- Check to be sure that all quick release fasteners, nuts and bolts are properly adjusted. Bounce the bicycle on the ground and listen and look for anything which may be loose.

- Be sure that your wheels are perfectly centered. Spin the wheels to be sure that they do not wobble up and down or from side to side, and that they do not make contact with the fork legs or brake pads while rotating.
- Learn and follow the local bicycle laws and regulations, and obey all traffic signals, signs and laws while you ride.

DO NOT RIDE YOUR BICYCLE IF IT DOES NOT PASS THIS PRE-RIDE TEST. CORRECT ANY CONDITION BEFORE YOU RIDE.

INTENDED USE INSTRUCTIONS

SELECT THE CORRECT FORK FOR YOUR RIDING STYLE AND RIDE PROPERLY

Marzocchi suspension forks are among the most durable and technologically advanced forks on the market today. However, no fork can withstand misuse, abuse or improper use that, over a short period of time, can cause your forks to fail when you least expect it.

It is critical that you select and use the fork that is appropriate for your riding style, and that you use the fork properly.

1. Identify Your Riding Style:

Trekking: Trekking is similar to XC riding but not as aggressive as XC. It involves slower riding and no riding over obstacles such as rocks, roots, or depressions. You should only attach generators and racks to the designated mounting points provided on the forks. Never make any modification to your fork to attach any equipment.

Cross Country (XC)/Marathon: Riding along hilly trails where some bumps and smaller obstacles, such as rocks, roots, or depressions, may be encountered. XC riding does not include jumps or “drops” (riding off rocks, fallen trees or ledges) from any height. XC forks must only be used with tires specifically designed for cross country riding, or disk, rim or linear pull brakes.

Free Ride (FR): This riding style is for skilled riders and involves aggressive slopes, large obstacles, and moderate jumps. Free Ride forks should be used only with disk brakes as well as frames, wheels and other components specifically designed for Free Riding. The disk brakes must be attached to the designated mounting points provided on the fork. Never make any modification to your fork to attach any equipment.

Dirt Jumper (DJ) / Urban Riding: This “BMX” or “motocross” style riding is only for the most skilled riders and involves jumping from one mound of dirt to another. It also includes riding over and around “urban obstacles” such as man-made or other concrete structures. These forks should be used only with disk brakes, as well as frames, wheels and other components specifically designed for this riding style. The disk brakes must be attached to the designated mounting points provided on the fork. Never make any modification to your fork to attach any equipment.

Down Hill (DH) / Extreme Free Ride: This discipline is only for professional or highly skilled riders. It includes for relatively high jumps or “drops” and negotiating larger obstacles such as boulders, fallen trees or holes. These forks should be used only with disk brakes, as well as frames, wheels and other components specifically designed for this riding style. The disk brakes must be attached to the designated mounting points provided on the fork. Never make any modification to your fork to attach any equipment.

WARNING

Ride only in areas specifically designated for your riding style.

2. Select the Correct Fork for Your Riding Style from the Table Below.

Please see your Marzocchi retailer, or contact Marzocchi directly, if you require assistance in selecting the correct fork.

Tab 1: *2004 Fork Riding Categories and Intended USE*

XC/Marathon	Free Riding	DJ/Urban Riding	Down Hill/Extreme Free Riding	Trekking
Marathon SL Marathon S	Z-150 Free Ride Z-150 FR SL Z-150 Drop-Off Z.1 FR SL Z.1 FR Z.1 Drop-Off I Z.1 Drop-Off II Z.1 Wedge	Dirt Jumper I Dirt Jumper II Dirt Jumper III	Monster T Super Monster	TXC TXC ECC
MX Comp MX Pro	Shiver SC	Shiver SC	Super T Pro	
MZ Comp MZ Race	Drop Off Comp	Street DJ	Junior T	
EXR Comp EXR Pro EXR Supra	Drop-Off Triple		888 R 888 RR 888 RT	
			Shiver DC	

3. Do Not Misuse or Abuse Your Forks

Do not misuse or abuse your forks. Learn how to ride, and always ride within your abilities. An out-of-control ride puts the equivalent of years of hard use on your forks after only a few rides.

Learn how to properly flow around obstacles on the trail. Hitting obstacles such as rocks, trees or holes straight on puts forces on your fork it was not designed to absorb.

Landing improperly after a jump or drop also puts forces on your fork it was not designed to absorb. You should **only** perform jumps or drops when a transition or down ramp is available to help your bicycle absorb the impact forces generated during the landing, and both wheels should smoothly make contact with the transition or down ramp at the same time. Any other type of landing is dangerous, as it could result in a component part failure and an accident. The steepness and length of the transition or down ramp depends on the height from which you jump or drop. Every situation is different for every rider; consult with an experienced rider before attempting any jump or drop.

WARNING

Failure to properly flow around obstacles on the trail, or failure to properly land after a jump or drop could cause your forks to fail, resulting in a loss of bicycle control and serious injury or death to the rider.

Your forks require regular maintenance and repair. The harder you ride, the more often you must inspect and maintain your forks. **If your forks are bent, deformed, cracked, or chipped, no matter how slight, immediately have a Certified Marzocchi Repair Center inspect the forks before you ride again.**

REMEMBER

Even forks made out of solid metal will fail if they are misused, abused, or improperly used! Extreme use can eventually wear out and break even the strongest components.

“Ride fast, yet ride Smart”

Use and maintenance instruction manual

English

MZ009_1

CONTENTS

1 Introduction - General Safety Regulations ... 98

1.1 Conventions ... 98
1.1.1 Orientation of the fork ... 98
1.1.2 Editorial pictograms ... 98
1.2 Use application of the BOMBER forks ... 99

2 Technical information ... 100

2.1 Fork's external components ... 100
2.1.1 Fender ... 100
2.1.2 Legs protections ... 100
2.1.3 Wheel axle securing system ... 101
2.2 Fork's internal components and fork's operation ... 114

3 Installation ... 116

3.1 Installing on the frame ... 116
3.2 Installing the brake system ... 117
3.3 Wheel installing with a standard fork's end ... 118
3.4 Wheel installing with a QR20 Plus fork ... 118
3.5 Wheel installing with a QR20 "With Bolt" fork ... 119
3.6 Wheel installing with a 888 Series fork ... 120
3.7 Wheel installing with a Monster Series fork ... 121
3.8 Wheel installing with a Shiver fork ... 122
3.9 Fender installing ... 122

4 Maintenance ... 123

4.1 Problems - Diagnosis - Solutions ... 123
4.2 General safety regulations ... 125
4.3 Cleaning the fork legs ... 126
4.4 Air Bleeding ... 127

5 Adjustments ... 128

5.1 Preload ... 129
5.1.1 Spring preload with external adjustment ... 129
5.1.2 Spring preload with internal adjustment ... 130
5.1.3 Internal spring preload ... 131
5.1.4 Air preload ... 132
5.2 Negative air ... 133
5.3 Cartridge forks rebound adjustment ... 134
5.4 Rebound adjustment with external adjustable pumping rod ... 135
5.5 Rebound adjustment with internal adjustable pumping rod ... 135
5.6 Compression adjustment ... 136
5.7 Compression adjustment at bottoming ... 136
5.8 ECC5 ... 137
5.9 ETA ... 137

6 Tables ... 138

7 Warranty ... 139

N Notes ... 141

Marzocchi distributors and service centers ... 281

TABLE INDEX

Table 1: Use application of the MY 2004 BOMBER FORKS 99

Table 2: Marathon - Mx Series 102

Table 3: Marathon 29er - Mx Series 29er 103

Table 4: Dirt Jumper Series..... 104

Table 5: Street DJ..... 105

Table 6: Z1 Wedge 106

Table 7: Z-1 Series 107

Table 8: Z-150 Series 108

Table 9: Shiver SC 109

Table 10: Junior T & Super T PRO..... 110

Table 11: Shiver DC 111

Table 12: 888 Series 112

Table 13: Monster Series 113

Table 14: BOMBER forks damping systems 115

Table 15: Problems - Diagnosis - Solutions..... 123

Table 16: Periodical maintenance table 124

Table 17: MY04 adjustments table 128

Table 18: Legend..... 129

Table 19: Tightening torques..... 138

Table 20: Recommended positive air pressure for spring forks..... 138

Table 21: Recommended positive air pressure for air forks..... 138

Table 22: Recommended negative air pressure..... 138

1 INTRODUCTION - GENERAL SAFETY REGULATIONS

Before reading this manual please carefully read the information contained in the “Safety regulations for the manual’s user” section.
The information contained in the “Safety regulations for the manual’s user” section will have to be followed for both, the MARZOCCHI BOMBER forks’ and maintenance.
If you have any questions regarding the care and maintenance of your suspension system, please contact your nearest service center directly. A list of service centers can be found at the end of this manual or on the Internet page www.marzocchi.com.
This manual does not explain how to assemble/disassemble the fork from the bicycle, the wheel, the steering set or any other component directly or indirectly associated with the fork that are not actually a part of the fork.
MARZOCCHI reserves the right to make changes to the products, at any time and without prior notice to improve the products or to meet any productive or commercial requirements.
The user is the only person responsible for the correct application of the assembly instructions in the present manual.

1.1 Conventions

1.1.1 Orientation of the fork

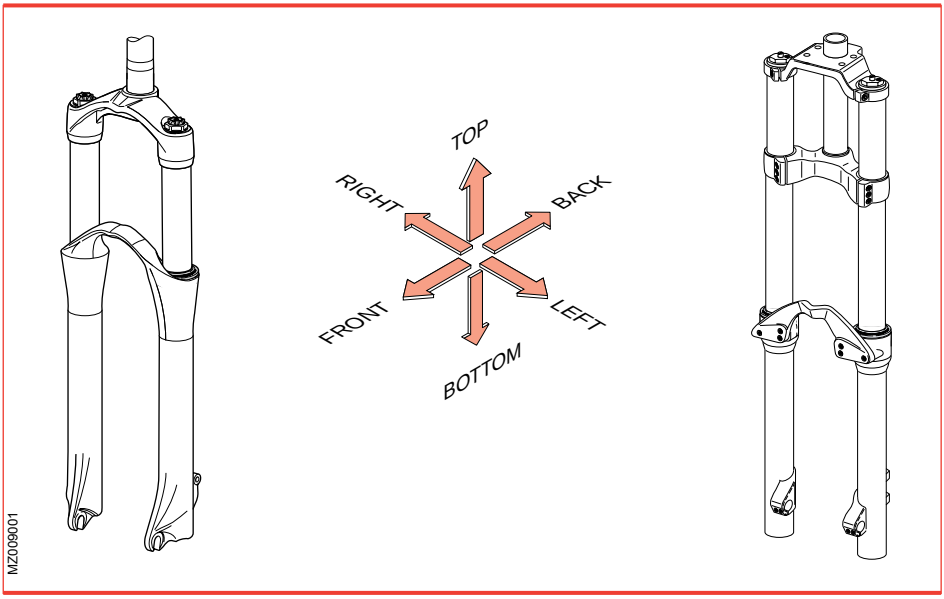

1.1.2 Editorial pictograms

ATTENTION

Descriptions preceded by this symbol contain information, instructions or procedures, which, if not respected, can cause damage or bad function to the fork, accidents to the user (even fatal ones) or damage to the environment.

NOTE

Descriptions preceded by this symbol contain information, prescriptions or procedures recommended by MARZOCCHI for the best fork’s use.

1.2 Use application of the BOMBER forks

You will find in the following table the use applications of MY2004 Marzocchi Bomber forks.

ATTENTION

Do not use forks for an application that is different from the one provided by the manufacturer. For further information concerning the specific fork's use, please refer to the "Safety regulations for the user"

Table 1: *Use application of the MY 2004 BOMBER FORKS*

	MARATHON CROSS COUNTRY	FREERIDE	DIRT JUMPER URBAN	DOWN HILL FREE RIDE EXTREME
Dirt Jumper I			●	
Dirt Jumper II			●	
Dirt Jumper III			●	
Junior T		●		●
Marathon S	●			
Marathon SL	●			
Monster T				●
MX Comp AIR	●			
MX Comp COIL	●			
MX Comp + ETA	●			
MX Pro AIR	●			
MX Pro COIL	●			
MX Pro + ETA	●			
888 R				●
888 RR				●
888 RT				●
Shiver DC		●		●
Shiver SC			●	
Street DJ			●	
Super Monster				●
Super T PRO		●		●
Z1 Drop-Off I		●		
Z1 Drop-Off II		●		
Z1 Wedge		●		
Z1 FR		●		
Z1 FR SL		●		
Z-150 DO		●		
Z-150 FR		●		
Z-150 FR SL	●			

2 TECHNICAL INFORMATION

2.1 Fork's external components

The MY 2004 MARZOCCHI BOMBER forks range includes many different models, having from 30 to 40 mm legs diameter and travels up to 300 mm. Apart from a few exceptions, the MY 2004 MARZOCCHI BOMBER forks range consists of two main assemblies:

- the stanchion tubes / steering crown assembly (which are assembled through a cryogenic process called "cryofit" for a stiff and undetachable fit).
- the magnesium-casted sliders/arch monolith assembly.

The materials used for the main components are the BAM® aluminium from the aerospace industry and the magnesium; these are lightweight materials that help reduce the fork's weight.

2.1.1 Fender

MARZOCCHI offers an optional integrated fender for all models with ø32mm legs and for the new forks of the 888 series.
The fender mounted to the underside of the crown helps protecting the rider against debris from the front tire.

2.1.2 Legs protections

They are made of plastic material and are current equipment on the upside-down models (Shiver SC and Shiver DC); they allow legs protection from mud and dust that can be raised by the front wheel during use; they also assure the legs integrity from hits.

2.1.3 Wheel axle securing system

The system for securing the wheel axle to the fork sliders can be standard, with traditional advanced dropouts or with the QR20 Plus system.

Forks using this system must have a suitable hub with 110 mm width spacing and a 20 mm wheel axle.

The MARZOCCHI QR20 Plus system: it is the new, sophisticated version of the QR20 system that fully wraps the 20 mm wheel axle, for maximum stiffness, while still providing an easy way to remove the wheel.

The new QR20 Plus 20 mm axle system is available in two different versions, both using a forged aluminium hinge that is attached to the lower magnesium slider. The forged aluminium lever can be the quick-release one, which makes opening and closing the flap routine, or it can be “with bolt”, where the clamping is made via a screw tightening.

The 20 mm wheel axle used in both QR20 Plus systems can be the quick-release type or the bolt-on type.
The upside down forks (Shiver SC and Shiver DC), as well as the models created for more intensive use (888 Series and Monster Series) are provided with a wheel fastening system originating from the motorcycle application, using a 20 mm axle.

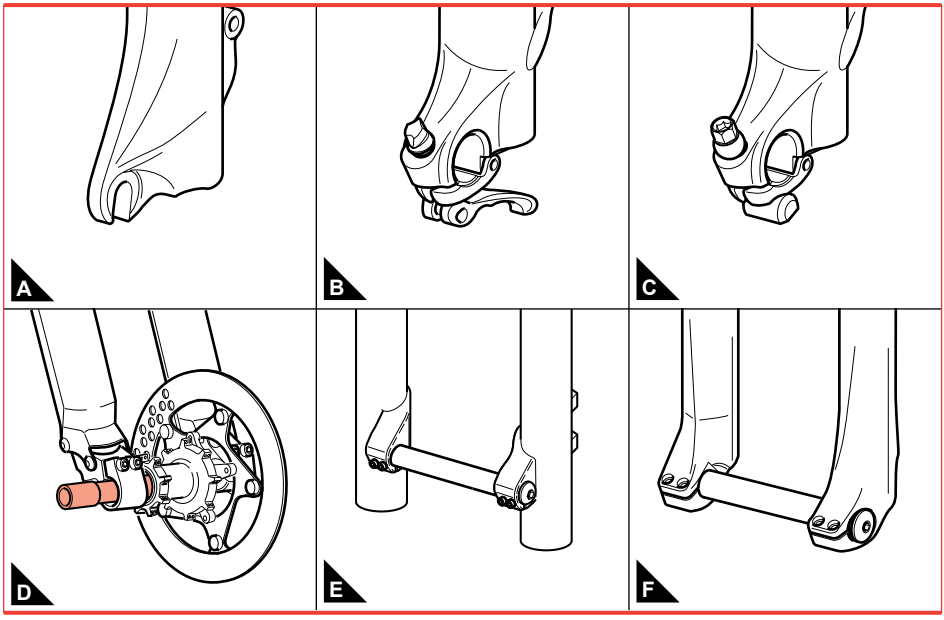

Marzocchi Bomber wheel axle securing systems: *(**A**) traditional advanced dropout, (**B**) QR20 Plus, (**C**) QR20 With Bolt, (**D**) Shiver dedicated axle, (**E**) Monster dedicated axle, (**F**) 888 dedicated axle.*

Table 2: *Marathon - Mx Series*

TRAVEL (C)	mm	65#	85	105	120
A (max)	mm	438	458	478	493
A (min)	mm	373	373	373	373

Marathon & Mx Series

 # : only for MX Comp

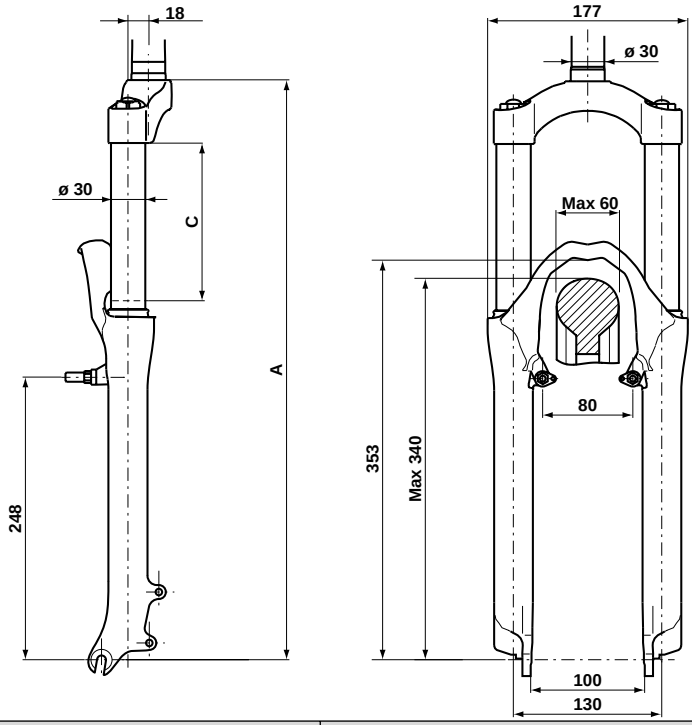

Disk brake mounts		●XC International Standard for 6” disk
V-brake fit		●
Drop out type	Standard	●
	QR 20 Plus	—
	QR 20 With Bolt	—
Accessories		—
● = current ○ = option — = not available		

ATTENTION

Marzocchi reserves the right to modify data and features quoted in the table here above, if needed for technical and/or commercial requirements. The dimensions indicated in the drawing are only given as indicative.
Please check on the internet page www.marzocchi.com for updated information.

Table 3: *Marathon 29er - Mx Series 29er*

TRAVEL (C)	mm	85	100
A (max)	mm	495	505
A (min)	mm	410	410

Marathon 29er & Mx 29er

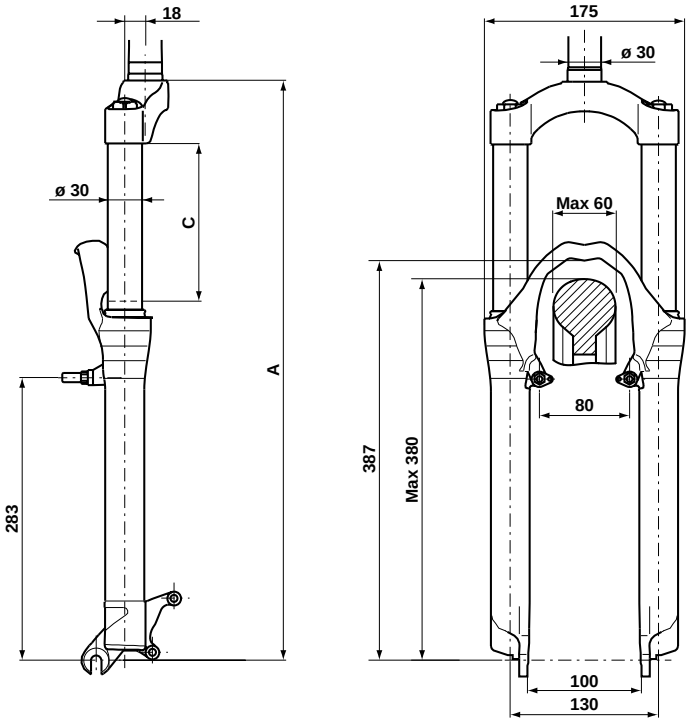

Disk brake mounts		●XC International Standard for 6” disk
V-brake fit		●
Drop out type	Standard	●
	QR 20 Plus	–
	QR 20 With Bolt	–
Accessories		–
● = current ○ = option – = not available		

ATTENTION

Marzocchi reserves the right to modify data and features quoted in the table here above, if needed for technical and/or commercial requirements. The dimensions indicated in the drawing are only given as indicative.
Please check on the internet page www.marzocchi.com for updated information.

MZ009_1

Table 4: *Dirt Jumper Series*

TRAVEL (C)	mm	110	130	150#
A (max)	mm	498	518	538
A (min)	mm	388	388	388

Dirt Jumper Series
Dirt Jumper I - Dirt Jumper II - Dirt Jumper III

 # : only for Dirt Jumper II

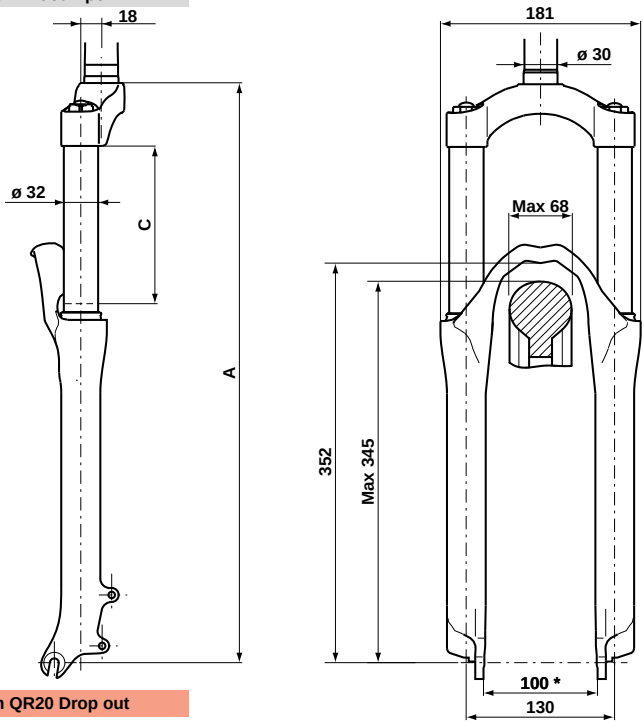

***:110 with QR20 Drop out**

Disk brake mounts		●XC International Standard for 6” disk
V-brake fit		—
Drop out type	Standard	●
	QR 20 Plus	○
	QR 20 With Bolt	○
Accessories		Integrated fender
● = current ○ = option — = not available		

ATTENTION

Marzocchi reserves the right to modify data and features quoted in the table here above, if needed for technical and/or commercial requirements. The dimensions indicated in the drawing are only given as indicative.
Please check on the internet page www.marzocchi.com for updated information.

MZ009_1

Table 5: *Street DJ*

TRAVEL (C)	mm	80
A (max)	mm	468
A (min)	mm	388

Street DJ

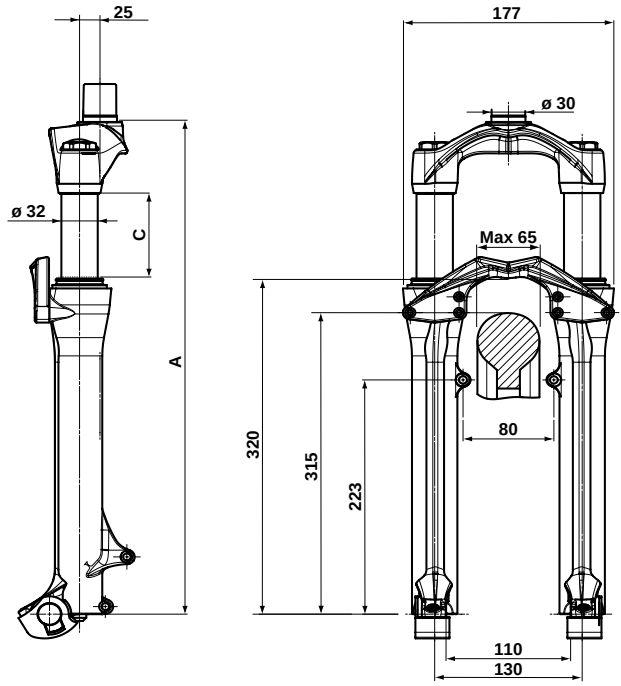

Disk brake mounts		●XC International Standard for 6” disk
V-brake fit		●
Drop out type	Standard	● Ø 20 mm dedicated axle
	QR 20 Plus	–
	QR 20 With Bolt	–
Accessories		Integrated fender
● = current ○ = option – = not available		

ATTENTION

Marzocchi reserves the right to modify data and features quoted in the table here above, if needed for technical and/or commercial requirements. The dimensions indicated in the drawing are only given as indicative.
Please check on the internet page www.marzocchi.com for updated information.

Table 6: *Z1 Wedge*

TRAVEL (C)	mm	130
A (max)	mm	503
A (min)	mm	373

Z1 Wedge

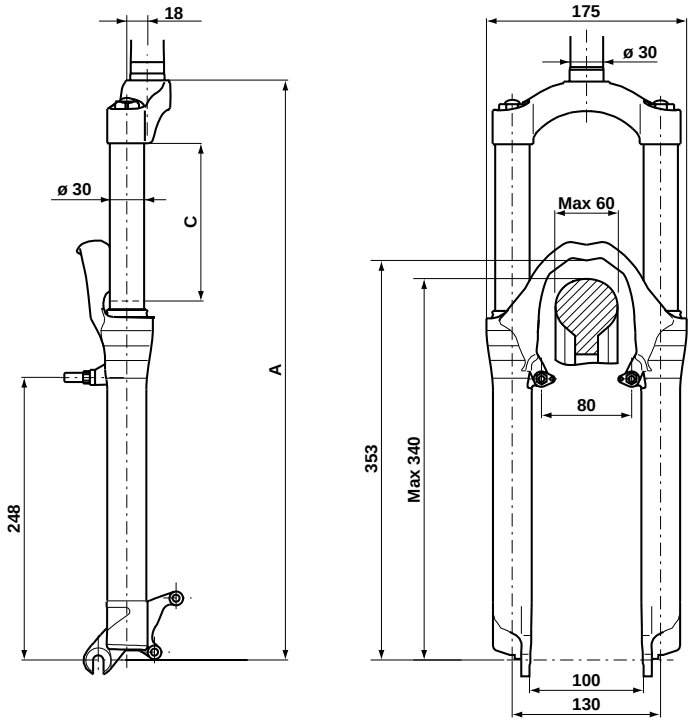

Disk brake mounts		●XC International Standard for 6” disk
V-brake fit		●
Drop out type	Standard	●
	QR 20 Plus	–
	QR 20 With Bolt	–
Accessories		–
● = current ○ = option – = not available		

ATTENTION

Marzocchi reserves the right to modify data and features quoted in the table here above, if needed for technical and/or commercial requirements. The dimensions indicated in the drawing are only given as indicative.
Please check on the internet page www.marzocchi.com for updated information.

Table 7: *Z-1 Series*

TRAVEL (C)	mm	130
A (max)	mm	518
A (min)	mm	388

Z1 Series
(except for Z1 Wedge)

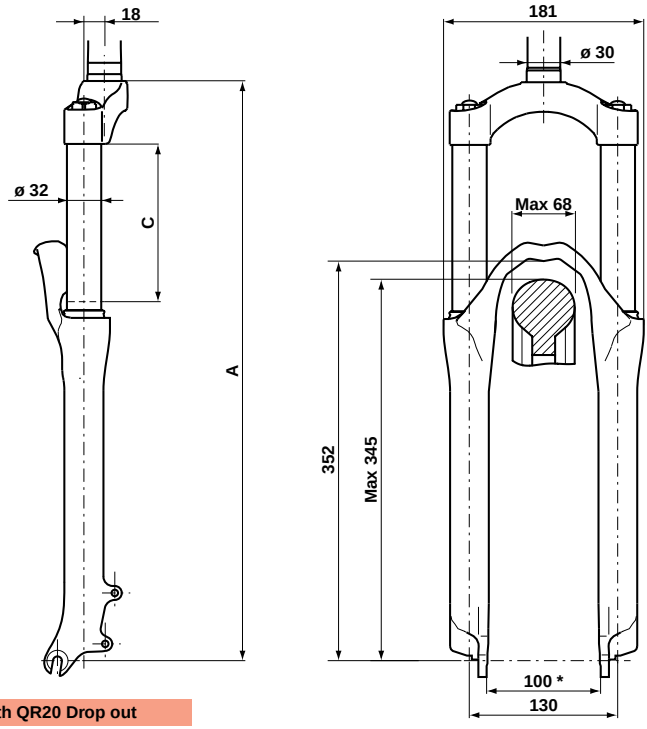

***: 110 with QR20 Drop out**

Disk brake mounts		● XC International Standard for 6” disk
V-brake fit		—
Drop out type	Standard	●
	QR 20 Plus	○
	QR 20 With Bolt	○
Accessories		Integrated fender
● = current ○ = option — = not available		

ATTENTION

Marzocchi reserves the right to modify data and features quoted in the table here above, if needed for technical and/or commercial requirements. The dimensions indicated in the drawing are only given as indicative.
Please check on the internet page www.marzocchi.com for updated information.

Table 8: *Z-150 Series*

TRAVEL (C)	mm	150
A (max)	mm	538
A (min)	mm	388

Z150 Series

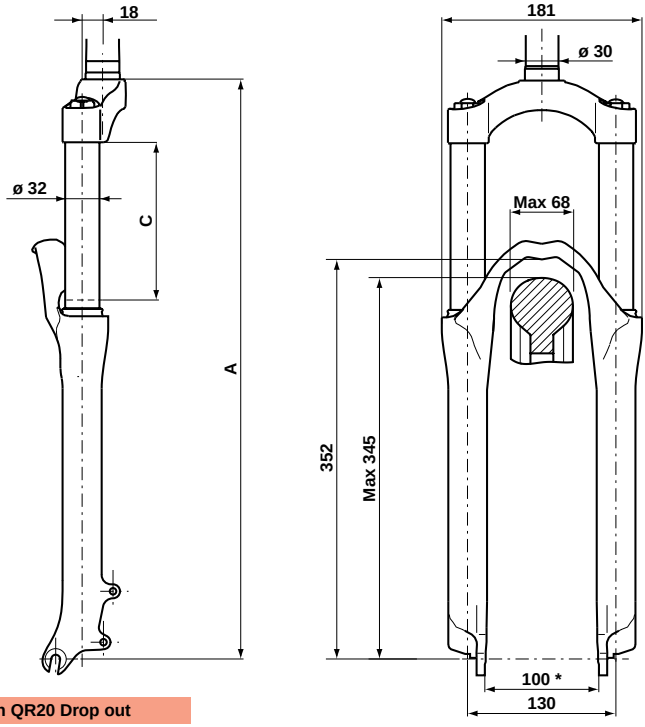

***:110 with QR20 Drop out**

Disk brake mounts		● XC International Standard for 6” disk
V-brake fit		—
Drop out type	Standard	●
	QR 20 Plus	○
	QR 20 With Bolt	○
Accessories		Integrated fender
● = current ○ = option — = not available		

ATTENTION

Marzocchi reserves the right to modify data and features quoted in the table here above, if needed for technical and/or commercial requirements. The dimensions indicated in the drawing are only given as indicative.
Please check on the internet page www.marzocchi.com for updated information.

Table 9: *Shiver SC*

TRAVEL (C)	mm	100
A (max)	mm	482
A (min)	mm	382

Shiver SC

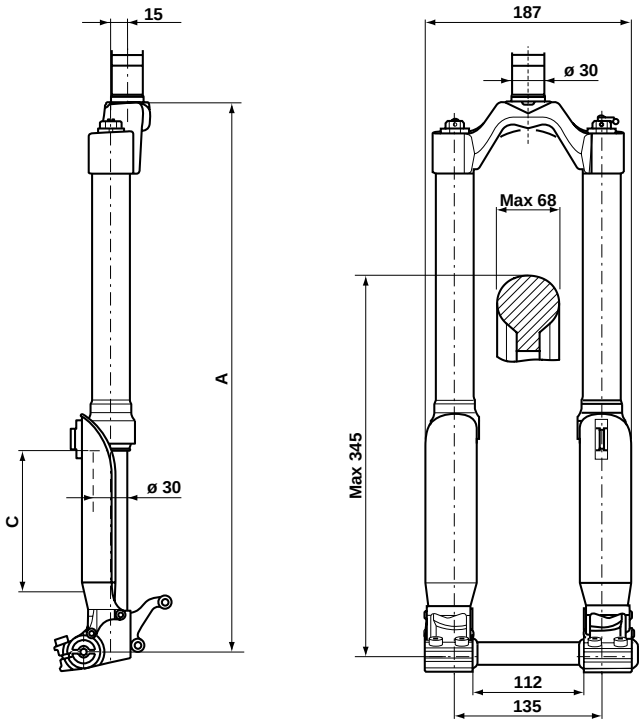

Disk brake mounts		● XC International Standard for 6” disk
V-brake fit		–
Drop out type	Standard	● Ø 20 mm dedicated axle
	QR 20 Plus	–
	QR 20 With Bolt	–
Accessories		–
● = current ○ = option – = not available		

ATTENTION

Marzocchi reserves the right to modify data and features quoted in the table here above, if needed for technical and/or commercial requirements. The dimensions indicated in the drawing are only given as indicative.
Please check on the internet page www.marzocchi.com for updated information.

Table 10: *Junior T & Super T PRO*

TRAVEL (C)	mm	170
A (max)	mm	558
A (min)	mm	388

Junior T & Super T PRO

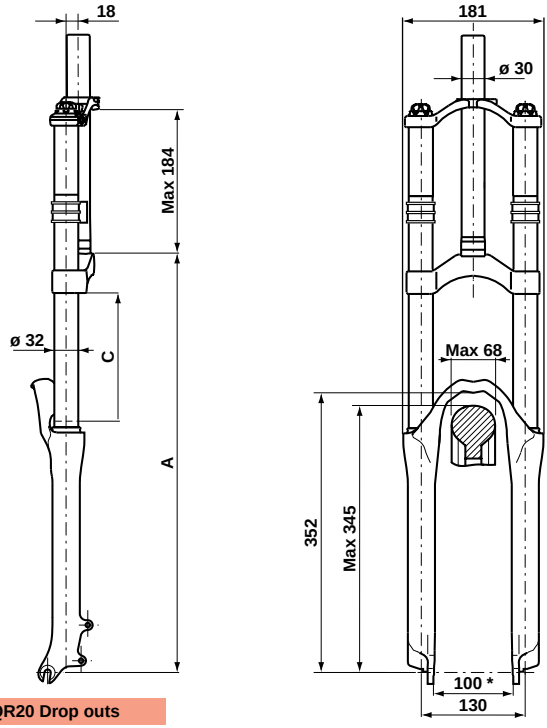

***: 110 with QR20 Drop outs**

Disk brake mounts		●XC International Standard for 6” disk	
V-brake fit		–	
Drop out type	Standard	●	–
	QR 20 Plus	○	○
	QR 20 With Bolt	○	●
Accessories		Integrated fender Direct mount handlebar clamp (long or short)	
● = current ○ = option – = not available		Junior T	Super T PRO

ATTENTION

Marzocchi reserves the right to modify data and features quoted in the table here above, if needed for technical and/or commercial requirements. The dimensions indicated in the drawing are only given as indicative.
Please check on the internet page www.marzocchi.com for updated information.

Table 11: *Shiver DC*

TRAVEL (C)	mm	190
A (max)	mm	572
A (min)	mm	382

Shiver DC

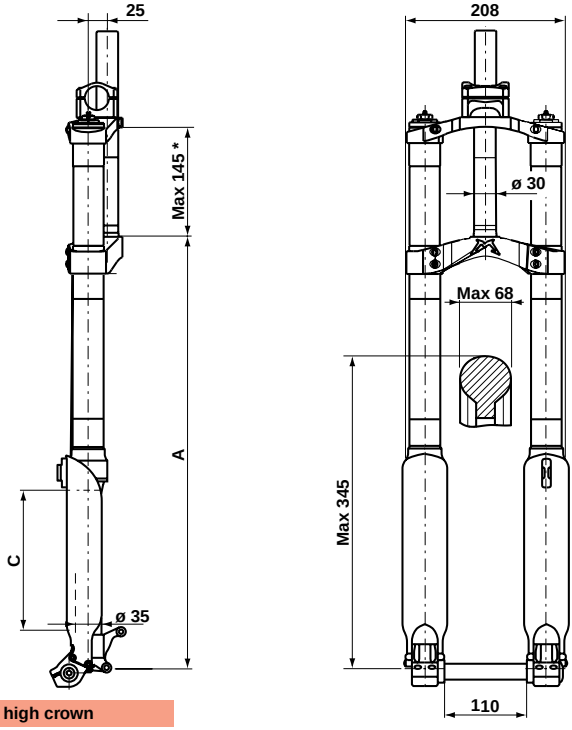

*** : 163 with high crown**

Disk brake mounts		● XC International Standard for 6” disk
V-brake fit		–
Drop out type	Standard	● Ø 20 mm dedicated axle
	QR 20 Plus	–
	QR 20 With Bolt	–
Accessories		Direct mount handlebar clamp (long or short)
● = current ○ = option – = not available		

ATTENTION

Marzocchi reserves the right to modify data and features quoted in the table here above, if needed for technical and/or commercial requirements. The dimensions indicated in the drawing are only given as indicative.
Please check on the internet page www.marzocchi.com for updated information.

Table 12: *888 Series*

TRAVEL (C)	mm	170	200
A (max)	mm	575	605
A (min)	mm	405	405

888 Series

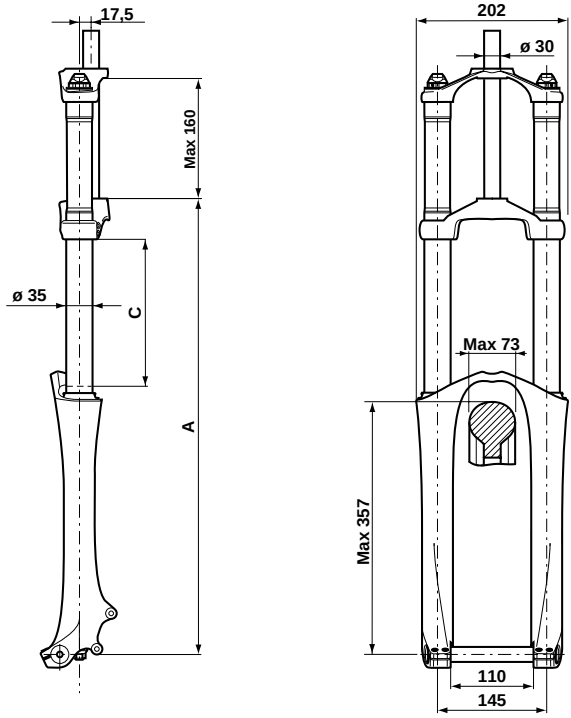

Disk brake mounts		● XC International Standard for 6” disk
V-brake fit		–
Drop out type	Standard	● Ø 20 mm dedicated axle
	QR 20 Plus	–
	QR 20 With Bolt	–
Accessories		Direct mount handlebar clamp Integrated fender
● = current ○ = option – = not available		

ATTENTION

Marzocchi reserves the right to modify data and features quoted in the table here above, if needed for technical and/or commercial requirements. The dimensions indicated in the drawing are only given as indicative.
Please check on the internet page www.marzocchi.com for updated information.

MZ009_1

Table 13: *Monster Series*

TRAVEL (C)	mm	200 (Monster)	300 (Super Monster)
A (max)	mm	593	693
A (min)	mm	393	393

Monster Series

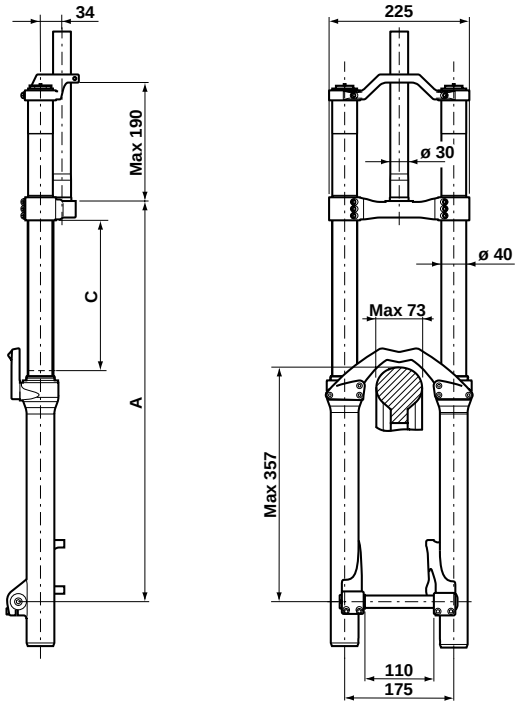

Disk brake mounts		●DH International Standard for 8” disk Rear calliper mount
V-brake fit		—
Drop out type	Standard	● Ø 20 mm dedicated axle
	QR 20 Plus	—
	QR 20 With Bolt	—
Accessories		Direct mount handlebar clamp (long or short)
● = current ○ = option — = not available		

ATTENTION

Marzocchi reserves the right to modify data and features quoted in the table here above, if needed for technical and/or commercial requirements. The dimensions indicated in the drawing are only given as indicative.
Please check on the internet page www.marzocchi.com for updated information.

MZ009_1

2.2 Fork's internal components and fork's operation

Inside MARZOCCHI forks you will find coil springs or air as a spring system.

The damping load that is generated during the fork legs compression and rebound, can be adjusted by cartridges, controlled by external adjusters, or by special hydraulic valve pumping rods, which operate according to compression speed (Speed Sensitive Valving).
Pumping rods can be controlled by external or internal adjusters, or they can have a fixed setting.

Cartridges and pumping rods are fully plunged in oil (Open Bath System). This system provides proper lubrication and cooling of the inner sliding parts; furthermore, the oil volume works as a damping and setting element.
The Open Bath system reduces the maintenance frequency compared to a sealed cartridge system.

Stanchion tubes are guided in the sliders by two teflon-coated bushings, free from static friction.

The seal system prevents oil leaks and contamination from particles entering the fork. It uses a special dual-lip oil seal and a dust seal at the top of each slider.

You will find here below the different fork damping systems:

ECC5: the new Extension Control Cartridge offers on-the-fly adjustment of the rebound damping with a 5-position clicker. Use the fast rebound position for downhilling, the 3 middle positions for race start sprints and rough climbing and the fully closed ECC position for steep dirt switchback climbs or Marathon style road climbs.

ETA: the new Extension Travel Adjustment locks down the rebound damping like the standard ECC, but still allows 25 - 30 mm of travel.

HSCV: the High-Speed Compression Valve (HSCV) allows lighter damping for better trail sensitivity but still resists bottoming. It is the best way to provide a controlled damping environment for consistent and perfect damping. The moving valve on the shaft controls rebound and low-speed compression damping. The special valve in the bottom of the cartridge (HSCV), takes the edge of any hard hit to maintain control.

SSV: the Speed Sensitive Valve (SSV) uses 5 valve circuits to control damping rates based on the fork's compression and rebound speed as well as the fork's position in the travel.

SSVF: The latest version of our Speed Sensitive Valve has a new Floating valve and spring design. It incorporates a spring-loaded valve, which is more responsive and uses an external rebound adjuster.

Table 14: BOMBER forks damping systems

Fork	Damping system	
	Right leg	Left leg
Dirt Jumper I	SSV pumping rod with external adjustment	SSV non-adjustable pumping rod
Dirt Jumper II	SSV pumping rod with internal adjustment	SSV non-adjustable pumping rod
Dirt Jumper III	SSV non-adjustable pumping rod	SSV non-adjustable pumping rod
Junior T	SSV non-adjustable pumping rod	SSV non-adjustable pumping rod
Marathon S	HSCV F/R hydraulic cartridge	ETA cartridge
Marathon SL	ECC5 hydraulic cartridge	Negative air cartridge
Monster T	F/R adjustment cartridge in the upper area and F/A in the lower area	Final F/A external adjustment cartridge
MX Comp AIR	SSV pumping rod with internal adjustment	Non-adjustable pumping rod
MX Comp COIL	SSV pumping rod with internal adjustment	SSV pumping rod with internal adjustment
MX Comp + ETA	SSV pumping rod with internal adjustment	ETA Cartridge
MX Pro AIR	SSVF pumping rod with external adjustment	Non-adjustable pumping rod
MX Pro COIL	SSVF pumping rod with external adjustment	Non-adjustable pumping rod
MX Pro + ETA	SSVF pumping rod with external adjustment	ETA cartridge
888 R	HSCV F/R hydraulic cartridge	Final F/A HSCV hydraulic cartridge
888 RR	HSCV F/R hydraulic cartridge	SSVF non-adjustable pumping rod
888 RT	SSVF non-adjustable pumping rod	SSVF non-adjustable pumping rod
Shiver DC	HSCV F/R hydraulic cartridge	HSCV F/R hydraulic cartridge
Shiver SC	HSCV F/R hydraulic cartridge	HSCV F/R hydraulic cartridge
Street DJ	SSV non-adjustable pumping rod	SSV non-adjustable pumping rod
Super Monster	F/R adjustment cartridge in the upper area and F/A in the lower area	Final F/A external adjustment cartridge
Super T PRO	HSCV F/R hydraulic cartridge	HSCV F/R hydraulic cartridge
Z1 Drop-Off I	SSVF pumping rod with external adjustment	ETA cartridge
Z1 Drop-Off II	SSV pumping rod with external adjustment	Non-adjustable pumping rod
Z1 Wedge	SSV non-adjustable pumping rod	SSV non-adjustable pumping rod
Z1 FR	HSCV F/R hydraulic cartridge	ETA cartridge
Z1 FR SL	ECC5 hydraulic cartridge	Negative air cartridge
Z-150 DO	SSVF pumping rod with external adjustment	ETA cartridge
Z-150 FR	HSCV F/R hydraulic cartridge	ETA cartridge
Z-150 FR SL	ECC5 hydraulic cartridge	Negative air cartridge

F/A= compression braking
F/R= rebound (or extension) braking

3 INSTALLATION

3.1 Installing on the frame

The fork is supplied with "**A-Head Set**" (threadless) steer tube to be cut according to frame size it will be used on.
Installing the fork on the bicycle frame is a very delicate operation that must be carried out by specialized personnel.

ATTENTION

The assembling on the frame and the steer tube adjustment must be carried out in compliance with the manufacturer's instructions. Improper installation may jeopardize the safety of the rider.
Marzocchi does not guarantee the installation and refuses all responsibility for damages and/or accidents that may be caused by an incorrect installation.

The steer tube must be pressed into the crown; its replacement must be carried out by one of our service centers only, using the required tools.

ATTENTION

In case of improper installation of the steer tube into the crown, the rider might lose control of his/her bicycle, thus jeopardizing his/her safety.

ATTENTION

On all dual crown MY 2004 BOMBER models, the lower crown is clamped to the stanchions (or to the sliders in the upside-down models) through some bolts. In this case, you will have to respect following precautions during installing:

- ***In case of oversized diameter areas on the stanchions or on the sliders, the crowns clamping can only be done in these areas (as shown in the picture).***
- ***In case of reference notches on the stanchions or on the sliders, the lower part of the lower crown must be positioned over the notch.***
- ***With the fork fully compressed, the distance between the inflated tyre and the bottom face of the steering crown shall be greater than 4 mm.***
- ***On the Monster forks the distance between the lower part of the lower crown and the dust seal must be bigger than 4 mm.***
- ***In the dual crown models, the maximum length of the steering tube between the two crowns shall be less than the values indicated in the following table***

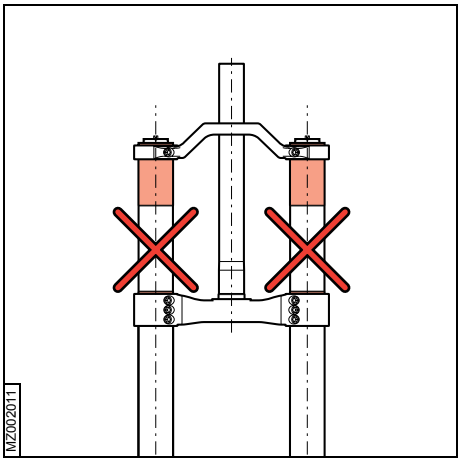

888	160 mm
Junior T e Super T PRO	184 mm
Shiver DC (with standard steering crown)	145 mm
Shiver DC (with high steering crown)	163 mm
Monster Series	190 mm

3.2 Installing the brake system

Installing the brake system is a very delicate operation that must be carried out by specialized personnel.

ATTENTION

Marzocchi does not guarantee the installation and accepts no liability for damage and/or accidents arising from a wrong installation.
Improper installation of the disk brake system can overstress the caliper mountings, which may break. The installation of the brake system must be carried out following the instructions of the brake system manufacturer. Improper installation can be dangerous for the rider.
Use only brake systems in accordance with the fork's specifications considering that:

- ***All forks with ø32mm legs can only mount disk brakes.***
- ***The forks with ø30mm legs can be equipped before delivery with disk brake mounts or V-brake mounts.***
- ***The transformation from one braking system to the other must be done by qualified personnel.***
- ***In the forks with assembled arch-slider (models for 29" wheel and Z1 Wedge), bolts (A) are not only used to fix the V-brake levers; they also contribute to lock the upper part of the slider to the arch. In the case of installation of a disk brake system, the service centres can replace bolts (A) with screws (B).***
- ***The user is not allowed to remove bolts (A) or screws (B).***
- ***Do not replace screws (B) with commercial bolts.***
- ***On the thread of bolts (A, C) and screws (B) a special anti-unscrewing treatment has been applied; as a result, the removed bolts cannot be re-used as they lose such treatment.***
- ***When a disk braking system is mounted, before any use, check that the brake tube is correctly fixed to the special mount (D, E).***

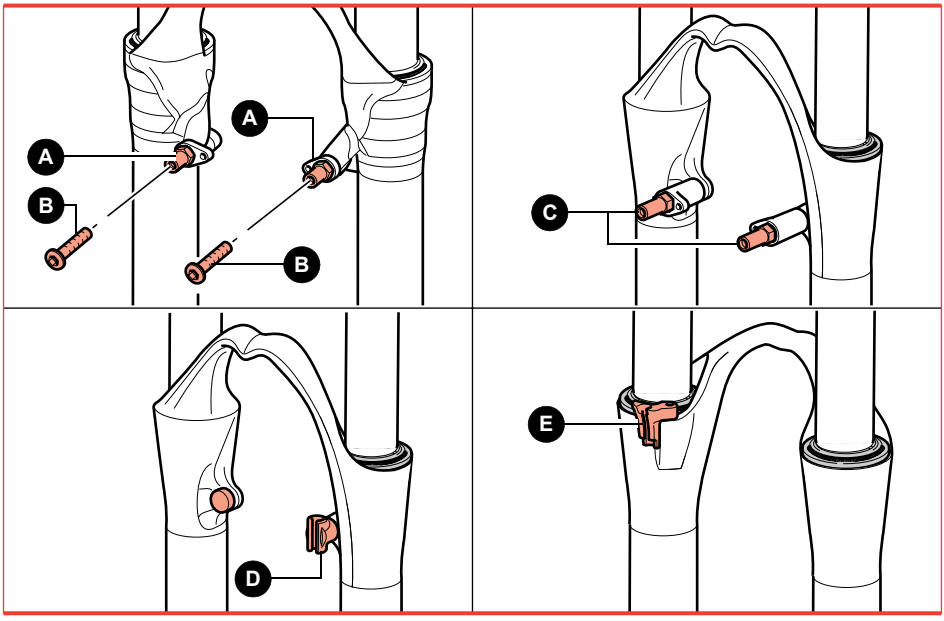

MZ009_1

3.3 Wheel installing with a standard fork's end

ATTENTION

Install the wheel in compliance with the manufacturer's instructions.

For correct fork function after wheel installing you will need to:

- check the correct fork-wheel alignment by fully compressing the fork a few times.
- lift the front wheel above the ground; turn the wheel a few times to verify the correct alignment with the disk brake or the V-brake pads.

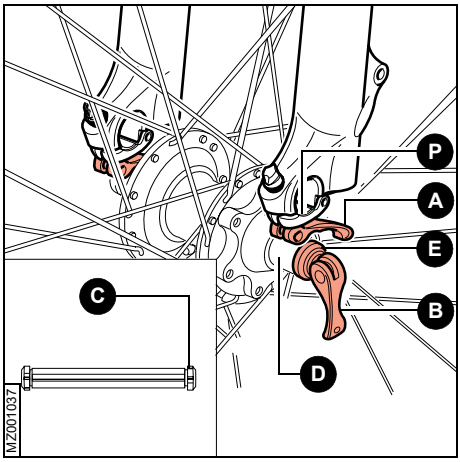

3.4 Wheel installing with a QR20 Plus fork

For correct fork function, please follow the instructions here below when installing the wheel:

- Release the securing system on both legs by pushing the levers (**A**) downwards and open the flap (**P**)
- For quick-release hubs, open the release lever (**B**).
- For threaded cap hubs, unscrew the cap (**C**) as much as needed to insert the wheel axle through the fork wheel axle clamp.
- Insert the wheel axle (**D**) through the fork wheel axle clamp.
- Make sure that the wheel axle supporting bushings (**E**) are centered in the sliders' seat
- If the wheel axle is provided with quick-release system, lock the wheel with the quick-release lever (**B**); otherwise, tighten the cap positioned on the axle side using a 6 mm Allen key to the required tightening torque (see Table - Tightening Torques).
- Verify the correct settling of the supporting bushings (**E**)
- Check the correct fork-wheel alignment, by fully compressing the fork a few times.
- Lift the front wheel; turn the wheel a few times to verify the correct alignment with the disk brake.
- Lock the securing system by pulling the levers (**A**) upwards and adjust clearance through the adjusters (**H**), if needed.

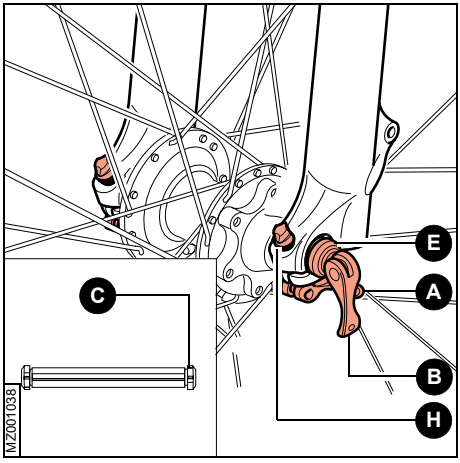

3.5 Wheel installing with a QR20 “With Bolt” fork

For correct fork function, please follow the instructions here below when installing the wheel:

- Using a 6 mm Allen key unscrew both screws (**L**) as much as needed to open the securing device (**M**)
- For quick-release hubs, open the release lever (**B**).
- For threaded cap hubs, unscrew the cap (**C**) as much as needed to insert the wheel axle through the fork wheel axle clamp.
- Insert the wheel axle (**D**) through the fork wheel axle clamp.
- Make sure that the wheel axle supporting bushings (**E**) are centred in the sliders’ seat
- If the wheel axle is provided with quick-release system, lock the wheel with the quick-release lever (**B**); otherwise, tighten the cap positioned on the axle side using a 6 mm Allen key to the required tightening torque (see Table - Tightening Torques).
- Verify the correct settling of the supporting bushings (**E**)
- Check the correct fork-wheel alignment, by fully compressing the fork a few times.
- Lift the front wheel; turn the wheel a few times to verify the correct alignment with the disk brake.
- Lock the wheel axle securing device (**M**) and tighten both screws (**L**) using a 6 mm Allen key.

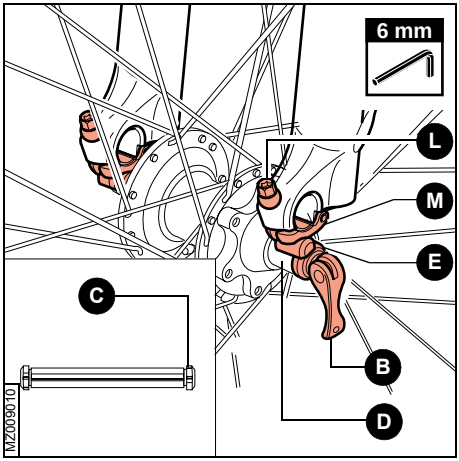

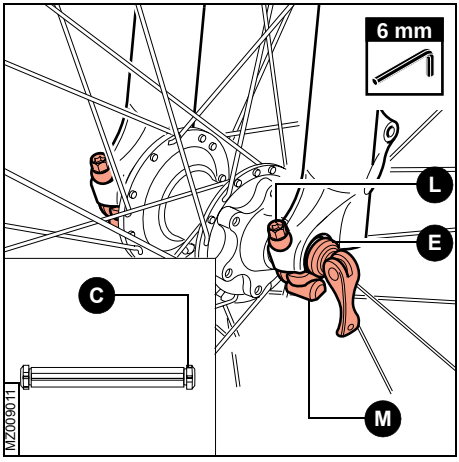

3.6 Wheel installing with a 888 Series fork

For correct fork function, please follow the instructions here below when installing the wheel:

- Insert the wheel axle (**A**) through the right wheel axle clamp, the wheel and the left wheel axle clamp.
- Lock and keep locking the wheel axle from the right side using a 6 mm Allen key, then still using a 6 mm Allen key tighten the wheel axle up to the required torque (see Table - Tightening Torques), acting on the cap (**C**)
- Fully compress the fork a few times to properly align the fork legs.
- Using a 5 mm Allen key tighten to the required torque (see Table - Tightening Torques) the bolts (**B**) positioned on both dropouts, with the sequence 1-2-1.

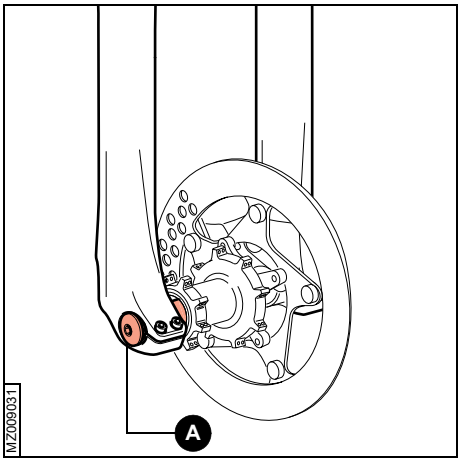

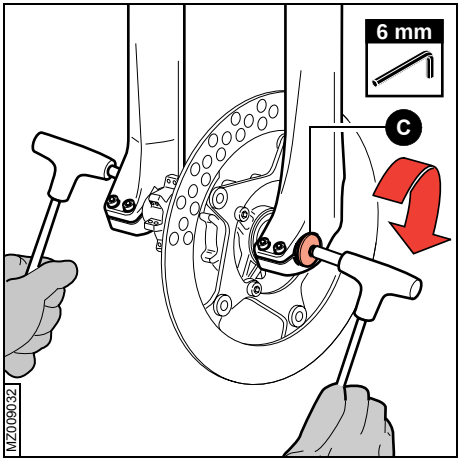

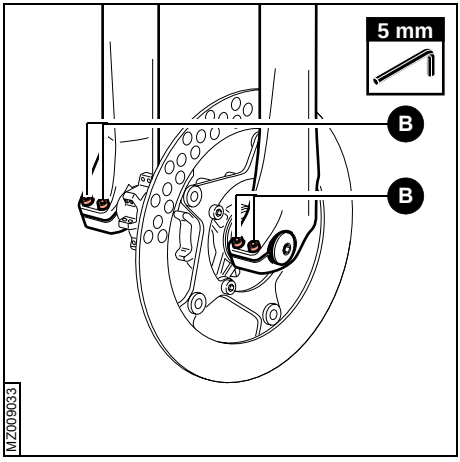

3.7 Wheel installing with a Monster Series fork

For a correct fork's function, please follow the instructions here below when installing the wheel.

- In case the fork has been disassembled from the bike frame or the fork's legs position as to the crowns has been changed, you will have to slightly loose the 6 bolts (**E**) holding the arch (**D**) by means of a 4 mm Allen key.
- Insert the wheel axle (**A**) through the right wheel axle clamp, the wheel and the left wheel axle clamp.
- By using a 6 mm Allen key tighten the axle bolt (**B**) located on the left side to the required torque (see Table - Tightening Torques).
- Fully compress the fork a few times.
- By using the 5 mm Allen key tighten the bolts (**C**) positioned on both dropouts to the required torque (see Table - Tightening Torques), with the 1-2-1 sequence.
- By using the 4 mm Allen key tighten the bolts (**E**) with the sequence 1-2-3-2-1 to the required torque (see Table - Tightening Torques).

ATTENTION

An incorrect wheel alignment can lead to loss of proper legs sliding.

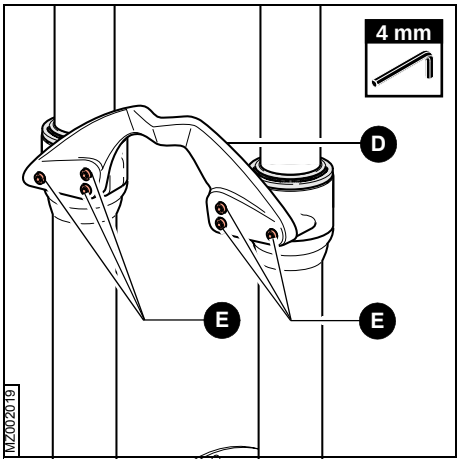

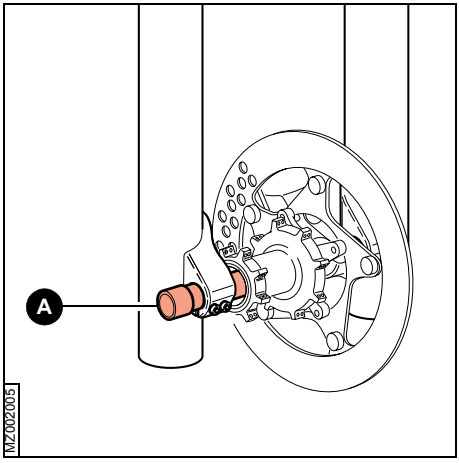

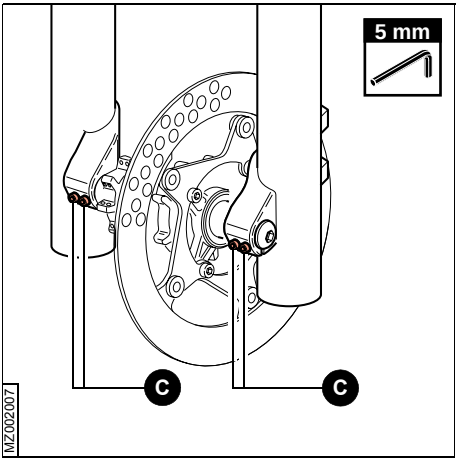

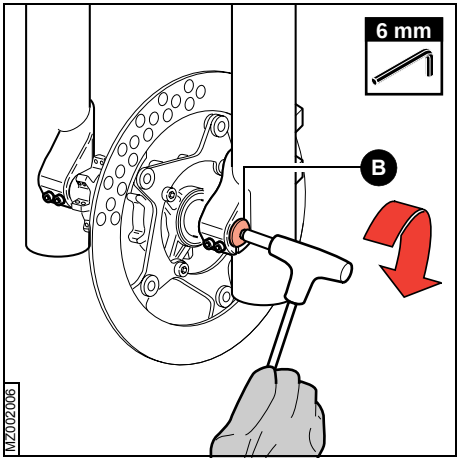

3.8 Wheel installing with a Shiver fork

For correct fork function, please follow the instructions here below when installing the wheel:

- Insert the wheel axle (**A**) through the right wheel axle clamp, the wheel and the left wheel axle clamp.
- Screw down the bolt (**B**) on the left side and tighten to the required torque (see Table - Tightening Torques).
- Fully compress the fork a few times to properly align the fork legs.
- Tighten to the required torque (see Table - Tightening Torques) the bolts (**C**) positioned on both dropouts, with the sequence 1-2-1.

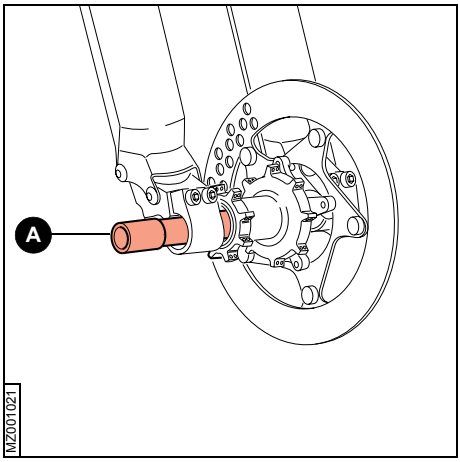

3.9 Fender installing

The Ø 32 mm legs forks and the 888 Series forks can be equipped with an integrated fender. The fender can be provided with the fork or purchased separately.
When assembling the fender (**F**) you must insert the small support bushing (**H**) between the screw and the fender as shown in the picture, and tighten the screws (**G**) with a 8 mm Allen wrench to the required torque (see Table - Tightening Torques).

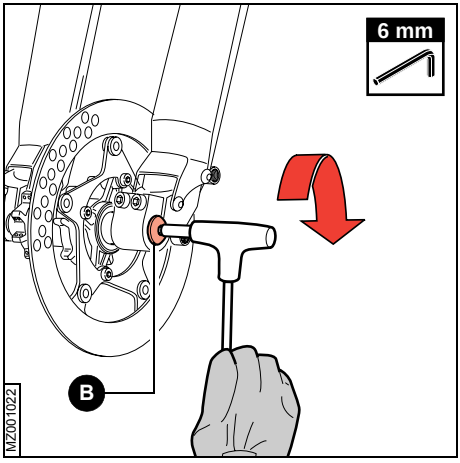

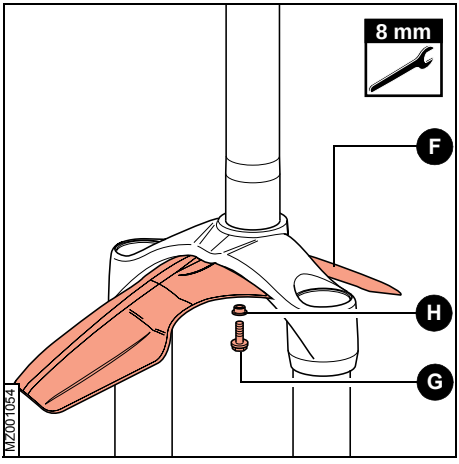

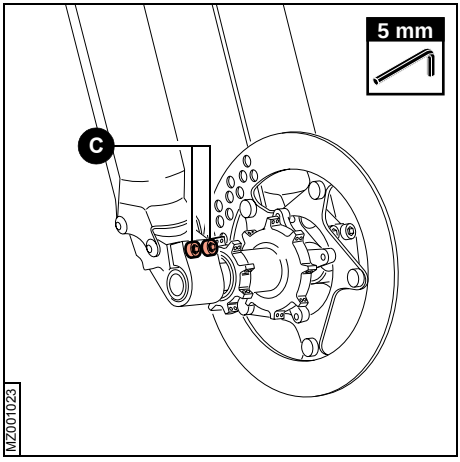

4 MAINTENANCE

4.1 Problems - Diagnosis - Solutions

This paragraph indicates some of the problems that may arise during the fork's use, as well as the possible causes of these problems and the suggested solutions.
Always check this table before working on the fork.

Table 15: *Problems - Diagnosis - Solutions*

Problem	Diagnosis		Solution
Fork has too much sag	Spring rate too soft or fork oil too fluid		Add spring preload by replacing the preload tube
			Check the oil height
			Change to stiffer spring rate
			Increase air pressure
Forks bottoms too easily, but it has the recommended sag	Not enough compression damping		Increase compression damping by changing oil level
			Increase compression damping through the proper adjuster
Fork bottoms too easily; needs more than maximum preload to attain proper sag	Spring rate too soft or fork oil too fluid		Check oil height
			Get stiffer springs
			Increase air pressure
Fork does not get full travel	Spring rate too stiff or fork oil too high		Check oil height
			Get softer spring
			Decrease air pressure
Fork extends too quickly; harsh top-out after impacts	Not enough rebound damping		Increase rebound damping
			Replace oil (SAE 7,5) with a higher viscosity
Fork gets easily to travel end	Not enough compression damping		Increase compression damping at travel end via the proper adjuster
Front wheel wants to tuck under while cornering	Too much rebound damping; spring rate too soft		Decrease the rebound damping
			Increase spring rate
Fork "packs up" or stays down in travel during multiple impacts	Too much rebound damping		Decrease rebound damping
Knocking sound during rebound, but no harsh top-out	Too much rebound damping		Decrease rebound damping

Operations to be carried out at MARZOCCHI authorized centres

Problem	Diagnosis		Solution
Oil “ring” on stanchions	Oil seals are contaminated		Replace all seals
Heavy amount of oil on stanchions; oil dripping down legs	Seals are damaged, stanchions could be damaged		Replace all seals and have the stanchions inspected
Fork is sticky; fork does not perform as new	Oil seals are contaminated; fork needs to be serviced		Replace all seals
Oil leakage from the bottom	Loose bottom nut/screw		Tighten bottom nut/screw
	O-ring damaged		Replace O-ring
Loss of sensitivity	Worn sliding bushings		Replace sliding bushings
	Old oil		Change oil

Operations to be carried out at MARZOCCHI authorized centres

Table 16: *Periodical maintenance table*

General maintenance operation		Use	
		Intense	Normal
Check screws tightening up to required torque		Before every ride	
Clean the sliders		After every ride	
Air pressure control		Before every ride	10 hours
Check the oil seals		25 hours	50 hours
Oil change		50 hours	100 hours
Oil seals replacement		50 hours	100 hours

Operations to be carried out at MARZOCCHI authorized centres

4.2 General safety regulations

- After a complete breakdown, always use new, original Marzocchi seals when reassembling.
- To tighten two bolts or nuts that are near each other, always follow the sequence 1-2-1 using the required tightening torque (see Table - Tightening Torques).
- Never use flammable or corrosive solvents to clean the parts, as these could damage the seals. If necessary use specific detergents that are not corrosive, not flammable or have a high flash point, compatible with the seals materials and preferably biodegradable.
- If you are planning not to use your fork for a long time, always lubricate the forks components that are in contact with some fork's oil.
- Never pour lubricants, solvents or detergents which are not completely biodegradable in the environment; these must be collected and kept in the relevant special containers, then disposed of according to the regulations in force.
- Use only metric spanners, not imperial spanners, which may have similar sizes, but can damage the bolts and make it impossible to unscrew them.
- Use the correct size and sort of screwdriver to unscrew slotted or crosshead screws.
- When using a screwdriver to assemble or disassemble metal stop rings, o-rings, sliding bushings or seal segments, avoid scratching or cutting the components with the screwdriver tip.
- Do not carry out any maintenance and / or adjustment operations that are not explained in this manual; if necessary, have such operations carried out by an authorized service centre.
- Only proceed to maintenance/overhaul operations if you are sure you are able to do it and you have got the right tools. If this is not the case, or if you are unsure, please contact an authorized service center, where specialized technicians with the right tools and original spare parts will service and overhaul your fork, putting it back into its original working conditions.
- Only use original spare parts.
- Work in a clean, ordered and well-lit place; if possible, avoid servicing outdoors.
- Polished surfaces need to be periodically treated with some "polishing compound" to be kept as bright as new.
- Carefully check there are no metal shavings or dust in the work area.
- Do not modify the fork's components.

4.3 Cleaning the fork legs

NOTE

The manufacturer lubricates the fork dust seal with some grease, which makes the stanchion tubes slide easier, especially when the fork has not been used for a long time. When using the suspension system, such grease can melt and stick to the stanchions, looking like an oil leak, although it is not.

Clean using specific, biodegradable, not corrosive and not flammable detergents.

- After every use, carefully clean the fork paying special attention to the stanchion tubes and the dust seals.

ATTENTION

Mud and dust, if not eliminated immediately, may cause serious damage to the suspension system.

In the Bomber forks, except for the ø30mm model, it is also possible to clean the seat of the dust seal as described below.

ATTENTION

Do not clean the seat of the dust seal on the ø30mm model.

- With a small screwdriver prize the dust seal (**B**) off the slider (**C**), without scratching the stanchion tube.
- Slide the dust seal along the stanchion tube and clean inside the dust seal and its seat on the slider with a jet of compressed air.

NOTE

It is advisable to tilt the fork leg to make it easier to remove foreign matters.

ATTENTION

Never use metal tools to clean any particles of dirt.

- Compress the fork legs slightly and remove any traces of dirt from the stanchion tubes.

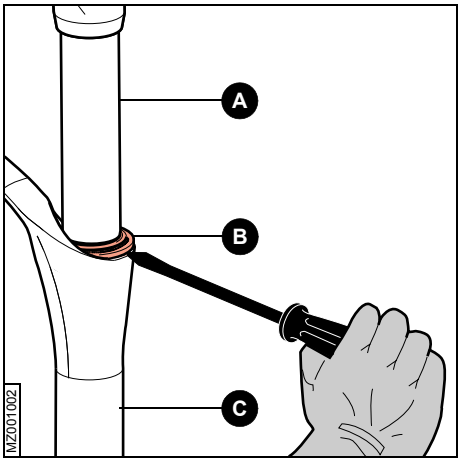

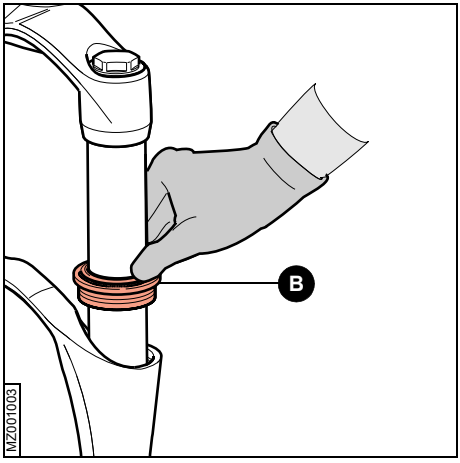

- Lubricate the dust seal and the visible surfaces of the oil seal with silicone grease.
- Re-assemble the dust seal (**B**) in its seat on the stanchion tube, pressing it home with your hands.

4.4 Air Bleeding

NOTE

This operation must be carried out with the fork assembled on the bicycle and with the fork's legs fully extended (front wheel off the ground).

NOTE

The pressure generated by the air that can get into the fork legs while the bike is being used and which, due to the special shape of the oil seals remains trapped inside, can cause the fork to malfunction.

In case of malfunction or loss of legs' smoothness please carry out following operation on both legs:

- By means of a 2 mm Allen key, unscrew the air bleed screw (**A**) located on the cap, in order to drain the pressure generated inside the fork's leg.
- Check the oil seal (**B**) condition; replace if needed.
- Tighten the air bleed screw (**A**) to the recommended torque (see Table - Tightening Torques), being careful not to damage the oil seal (**B**).

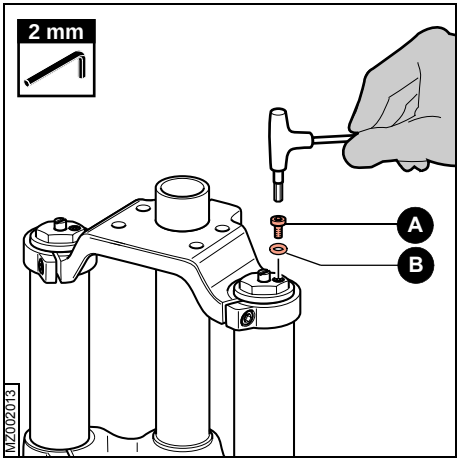

5 ADJUSTMENTS

⚠ ATTENTION

Please visit our web site www.marzocchi.com for any information concerning the travel increase kit and for different spring rates (K).

Table 17: *MY04 adjustments table*

Fork	PLe	PLmi	PLi	A+	A-	REBC	ECA	EHSC	PRe	PRi	ECC5	ETA
Dirt Jumper I				●					●			
Dirt Jumper II				●						●		
Dirt Jumper III				●								
Junior T	●									●		
Marathon S				●								●
Marathon SL				●	●						●	
Monster T						●	●	●				
MX Comp AIR				●						●		
MX Comp COIL				●						●		
MX Comp + ETA				●						●		●
MX Pro AIR				●					●			
MX Pro COIL	✪			✪					●			
MX Pro + ETA				●					●			●
888 R			●			●		●				
888 RR			●			●						
888 RT	*Non-adjustable model*											
Shiver DC	●					●						
Shiver SC	●					●						
Street DJ				●								
Super Monster						●	●	●				
Super T PRO	●					●						
Z1 Drop-Off I				●					●			●
Z1 Drop-Off II				●						●		
Z1 FR				●		●						●
Z1 FR SL				●	●						●	
Z-150 DO				●					●			●
Z1 Wedge		●										
Z-150 FR				●		●						●
Z-150 FR SL				●	●						●	
See paragraph	*5.1.1*	*5.1.2*	*5.1.3*	*5.1.4*	*5.2*	*5.3*	*5.6*	*5.7*	*5.4*	*5.5*	*5.8*	*5.9*

✪ The Mx Pro Coil model can be supplied with a PLe register or an A+ register.

MZ009_1

Table 18: Legend

PLe	External Preload	Spring preload with external adjuster
PLmi	Internal mechanic Preload	Spring preload with internal mechanical adjuster
PLi	Internal Preload	Internal Preload
A+	Positive Air Preload	Positive Air Preload
A-	Negative Air Preload	Negative Air Preload
REBC	Rebound cartridge	Rebound Cartridge
ECA	External Compression Adjust	External Compression Adjust
EHSC	External High Speed Compression	External High Speed Compression
PRe	External rebound register	External rebound register
PRi	Internal rebound register	Internal rebound register
ECC5	5 position extension control cartridge	5 position extension control cartridge
ETA	Extension travel adjustment cartridge	Extension travel adjustment cartridge

5.1 Preload

To make the most of the fork's travel, the sag given by the rider's weight must remain between 10% and 20% of the total travel length for the XC forks and between 20% and 30% for the DH forks.
To reach this result, act on the spring preload adjusters or change the pressure in the fork legs.

5.1.1 Spring preload with external adjustment

NOTE

The fork is set to the minimum preload by the manufacturer, i.e. the adjuster knob/screw is completely turned counterclockwise. However, the spring is slightly preloaded to help counteractining static load.

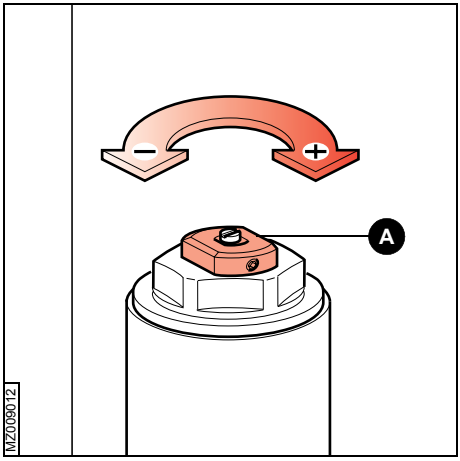

By turning the knob (**A**) on the top of the fork's leg, you can modify the spring preload to adjust the initial setting according to the rider's weight and needs.

- By turning the knob clockwise, the preload spring can be increased up to the maximum value, which corresponds to a spring compression of about 15 mm
- By turning the knob counterclockwise, you will reduce the preload spring down to the minimum value.

ATTENTION

Do not force the adjustment knob past its limits (A).

5.1.2 Spring preload with internal adjustment

NOTE

The fork is set to the minimum preload by the manufacturer, i.e. the adjuster is completely turned counterclockwise. However, the spring is slightly preloaded to help counteractining static load.

To adjust the initial setting according to the rider's weight and needs, you will have to remove the plastic protection cap (**A**) and turn the adjuster (**B**), using a 4 mm Allen key.

- By turning the adjsuter clockwise, the preload spring can be increased up to the maximum value.
- By turning the adjuster counterclockwise, you will reduce the preload spring down to the minimum value.

Once the adjustment completed put the plastic protection cap (**A**) back to its seat.

ATTENTION

Do not force the adjuster past its limits (B).

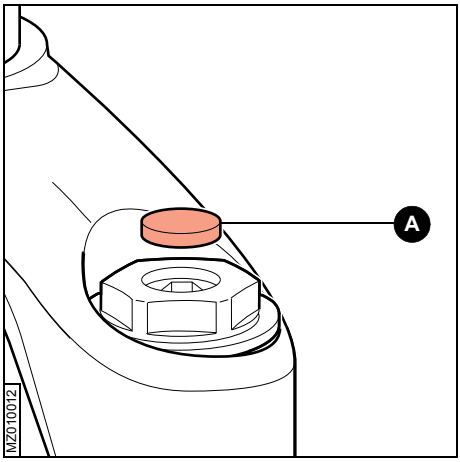

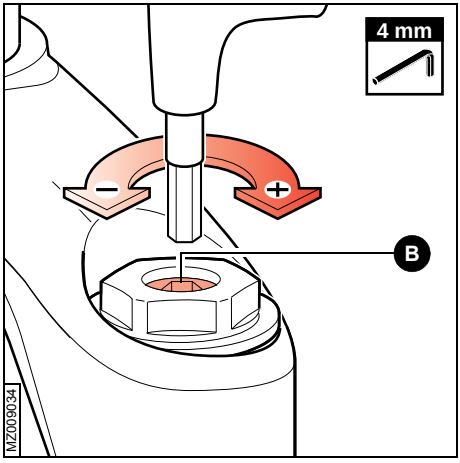

5.1.3 Internal spring preload

The 888R and 888RR models have a revolutionary coil preload system.
The spring preload adjustment must be carried out in respect of the procedure here below explained:

- Using a 26 mm wrench unscrew both fork's upper caps (**A**).
- Lower the stanchions as much as needed to allow the shaft to come out the cartridge.
- Press and keep pressing downwards the washer (**B**) supporting the spring.
- Using a small screwdriver, take off from its seat the metallic wire (**C**) that is locking the washer (**B**) supporting the spring.
- Keep the washer pressed and insert the metallic wire into a lower notch to increase preload, or into an upper notch to reduce it.

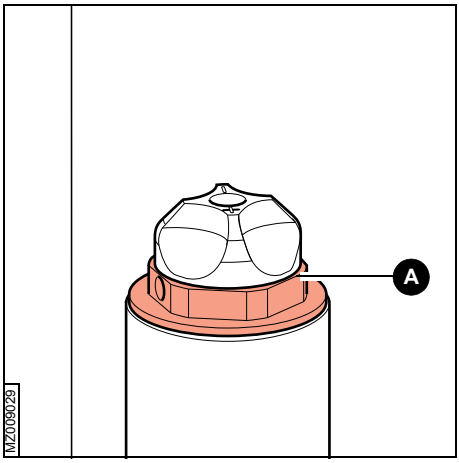

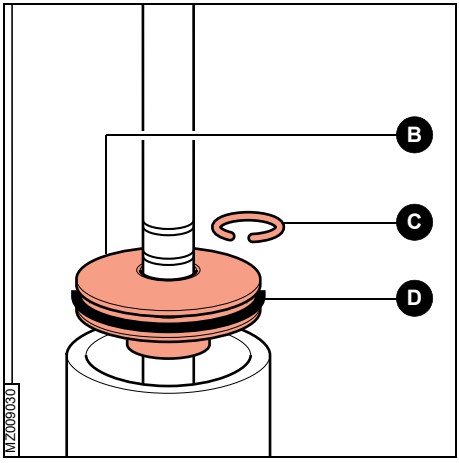

ATTENTION

During the extraction and the insertion of the metallic wire be very careful not to damage the components.
If the pumping rod and more precisely the metallic wire are even slightly damaged, do not use the fork in any case and immediately contact a Marzocchi authorized service centre.
Do not alter the metallic wire.

- Lift the stanchions and tighten the fork's upper cap (**B**) using a 26 mm wrench up to the required torque (see Table - Tightening Torques).

ATTENTION

During the insertion of the cartridge inside the stanchion be very careful not to damage the O-Ring (D).

5.1.4 Air preload

ATTENTION

To inflate your fork, use only the special MARZOCCHI pump with pressure gauge, which you can buy at the authorized centers. Use of improper tools might lead to improper inflating and cause improper function or damage to the fork itself.

NOTE

If you need to reduce the pressure inside the fork's leg, just push lightly on the valve pin, by means of a pointed object. Apply the same preload pressure on both legs.

By pressurizing air through the valve (**D**), you can adjust the damping of the forces generated during the COMPRESSION phase.
If you increase the pressure inside the fork's leg, you increase the preload. To do so, you need to:

- remove the dust cap (**A**).
- fully tighten the threaded pump adapter.
- inflate air up to the required pressure.
- refit the dust cap (**A**)

Some forks are provided with a more sophisticated adjustment system and a different air valve: in this case, to adjust the air preload, you will need the supplied dedicated adapter.

Right leg positive air adjustment:

- Using a 2mm Allen wrench, loosen the screw (**C**) fixing the ECC5 knob.
- Pay attention that pin (**L**) and spring (**H**) do not come out of their seat.
- Remove screw (**C**) and knob (**B**).
- Fit and tighten the adapter of the inflation pump (**E**) to the valve.
- Inflate till reaching the pressure you wish.
- Refit the knob (**B**).
- Using the 2mm Allen wrench, tighten the screw (**C**) to the recommended torque (see table - Tightening Torques).

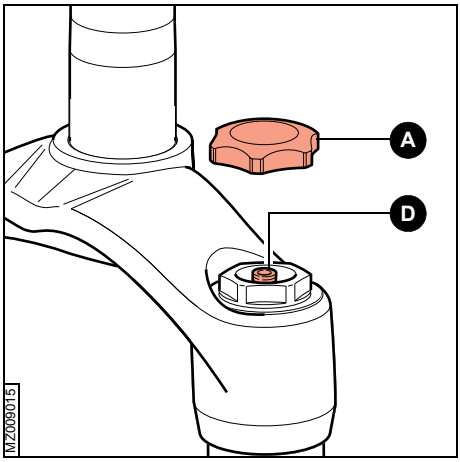

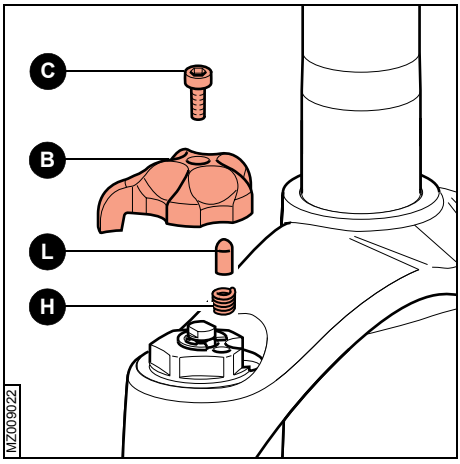

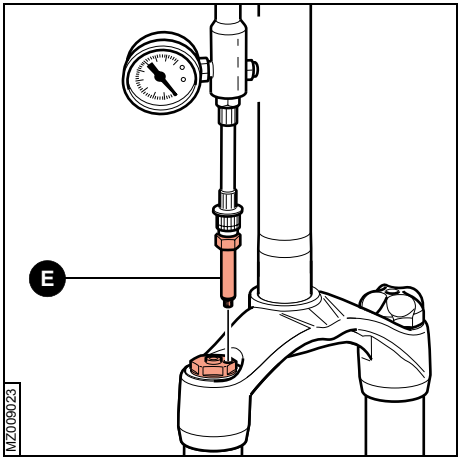

MZ009_1

Left leg positive air adjustment:

- Unscrew and remove the dust cap (**A**)
- Fully tighten the pump adapter on the outside valve (**B**)
- Inflate air up to the required pressure
- Fully tighten the dust cap (**A**)

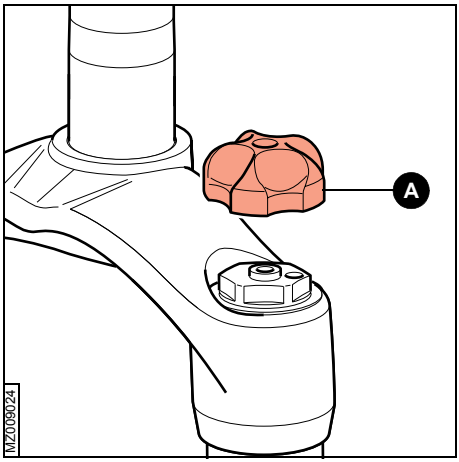

ATTENTION

Respect the suggested pressures:

- ***Spring forks: see Table - Recommended pressures for spring forks***
- ***Air forks: see Table - Recommended pressures for air forks***

5.2 Negative air

ATTENTION

To inflate your fork, use only the special MARZOCCHI pump with pressure gauge, which you can buy at the authorized centers. Use of improper tools might lead to improper inflating and cause improper function or damage to the fork itself.

By pressurizing air through the valve, you can adjust the damping of the forces generated during the REBOUND phase.

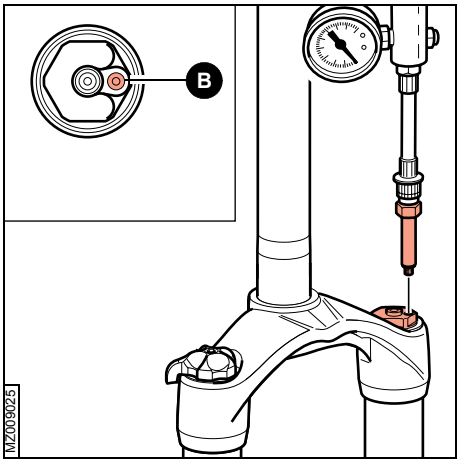

If you increase the pressure inside the fork's leg, you increase the rebound damping.
To do so, you need to:

- unscrew and remove the dust cap (**A**).
- fully tighten the pump adapter on the valve (**C**), that is located in the central position.
- inflate air up to the required pressure.
- fully tighten the dust cap (**A**)

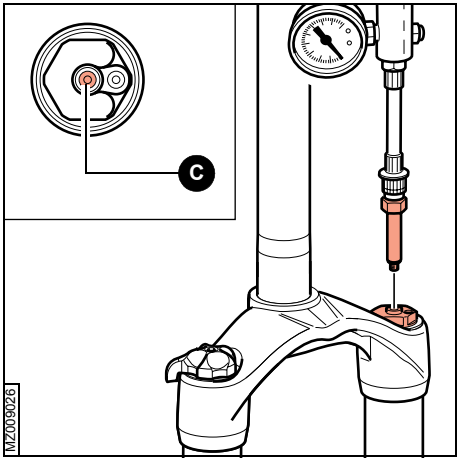

5.3 Cartridge forks rebound adjustment

The extension (or rebound) damping adjustment can be made, according to the models, by rotating the adjustment knob (**A**) directly, or, where the knob is not available, by acting on the adjustment screw (**B**), using a proper flat tip screwdriver.
In both cases you will modify the hydraulic configuration of the inner valves, regulating the rebound.

NOTE

On the models provided with compression hydraulic damping adjustment at travel end, the rebound damping adjuster located on the top of the right leg can be easily recognized thanks to the "R" carved on the knob or on the cap.

- When turning the adjuster clockwise, you will increase the rebound hydraulic damping, making the fork return slower during the rebound phase.
- When turning the adjuster counterclockwise, you will decrease the rebound hydraulic damping, making the fork more responsive during the rebound phase.

ATTENTION

Do not force the adjustment screws (A, B) past their limits.

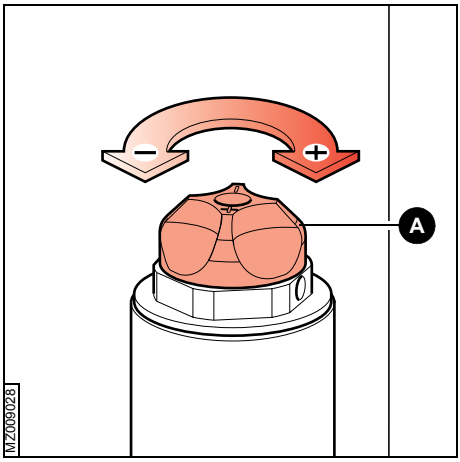

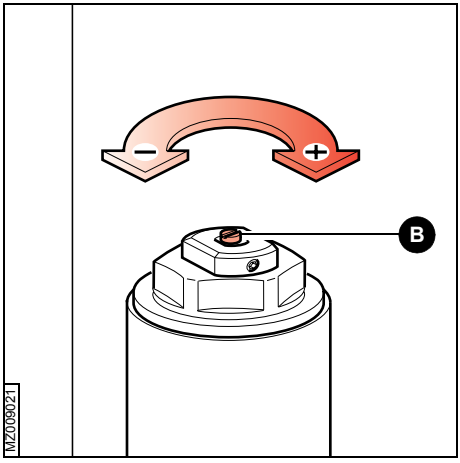

5.4 Rebound adjustment with external adjustable pumping rod

When turning the adjustment knob (**B**) located on the bottom of the fork's leg, you can adjust the damping during the rebound phase.
By turning on the adjustment screw you can modify the hydraulic configuration of the inner valves: this means that there will be more or less oil flowing through the valve.

- When turning the adjuster clockwise, you will increase the rebound hydraulic damping, making the fork slower during the rebound phase.
- When turning the adjuster counterclockwise, you will decrease the rebound hydraulic damping, making the fork more responsive during the rebound phase.

ATTENTION

Do not force the adjustment knob (B) past its limits.

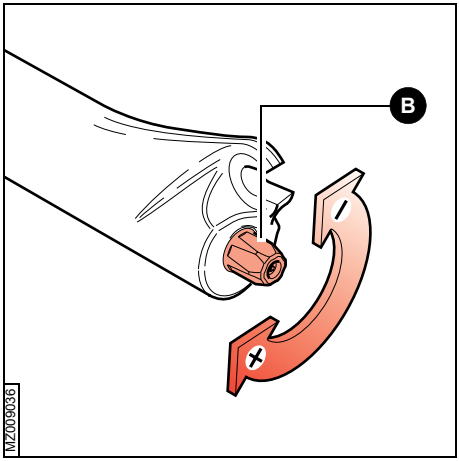

5.5 Rebound adjustment with internal adjustable pumping rod

You will find some damping rods where the rebound adjustment is located inside the stanchion tube.
To adjust these forks, you will need to:

- remove the dust cap (**A**) located on the top of the fork's leg.
- insert the supplied hexagon rod (**B**) into the stanchion tube, making sure to center the adjustment seat (**C**)
- When turning the adjuster counterclockwise, you will increase the rebound hydraulic damping, making the fork slower during the rebound phase.
- When turning the adjuster clockwise, you will decrease the rebound hydraulic damping, making the fork more responsive during the rebound phase.

ATTENTION

Do not force the adjustment screw (C) past its limits.

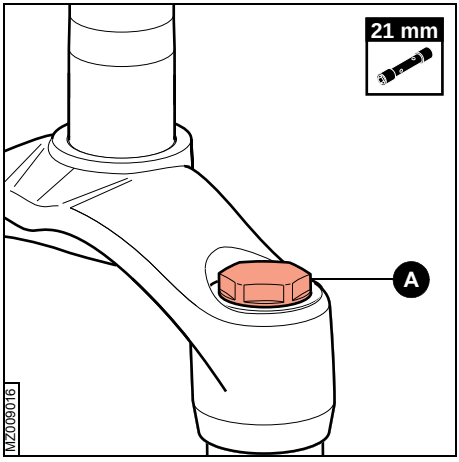

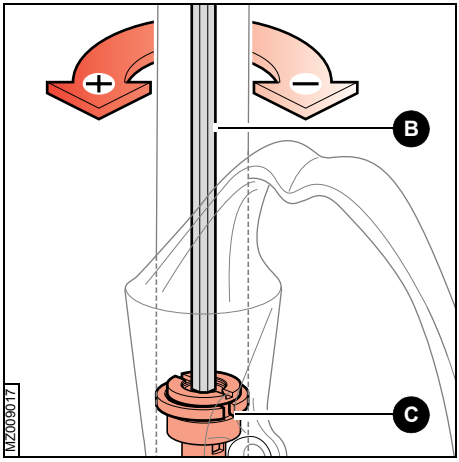

5.6 Compression adjustment

By acting on the adjustment screw (**T**), located on bottom of the right leg, you can control the fork's compression damping.
By turning the adjustment screw and using a proper small flat tip screwdriver, you can adjust the hydraulic configuration of the inner valves that control the compression.

- When turning the adjuster clockwise, you will increase the compression hydraulic braking, reducing the travel made by the fork, under the same stress.
- When turning the adjuster counter clockwise, you will decrease the compression hydraulic braking, making the fork softer against ground harshness.

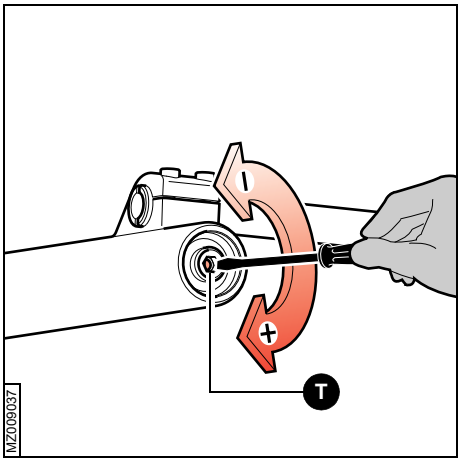

ATTENTION

Do not force the adjuster screw (T) past its limits.

5.7 Compression adjustment at bottoming

The compression damping adjustment can be made, according to the models, by rotating the adjustment knob (**A**) directly, or, where the knob is not available, by acting on the adjustment screw (**B**), using a proper flat tip screwdriver.
In both cases you will modify the hydraulic configuration of the inner valves, regulating the rebound.

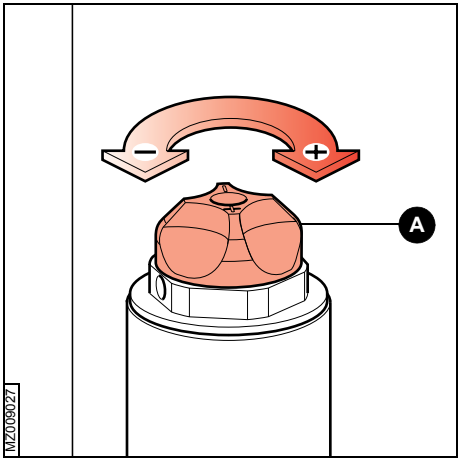

NOTE

The compression damping adjuster at bottoming can be easily recognized thanks to the "C" carved on the knob or on the cap.

- When turning the adjuster clockwise, you will increase the hydraulic braking, preventing the fork to bottom out.
- When turning the adjuster counter clockwise, you will decrease the hydraulic braking.

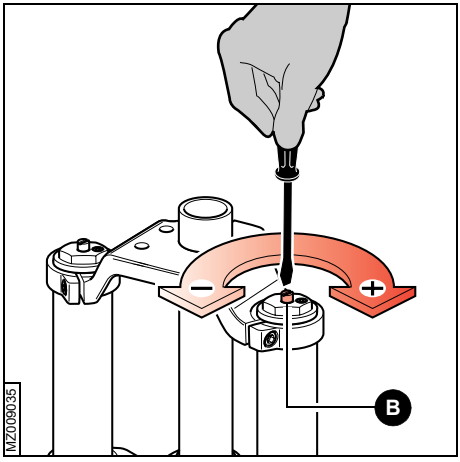

ATTENTION

Do not force the adjustment screws (A, B) past their limits.

5.8 ECC5

The ECC5 cartridge offers on-the-fly adjustment of the rebound damping.
By turning on the adjuster (**A**) you can modify the hydraulic configuration of the inner valves, controlling the flow of more or less oil, up to the "LOCK OUT" position, where no oil flows through.
Adjustment is possible through a 5-position clicker.

Position 1: "LOCK OUT"
When the knob is fully tightened clockwise, you will get the maximum rebound damping. In this position the fork's legs will stay down after impacts; any other impact will make lower the fork's geometry further.
This position is only suitable for hard, steep climbs.

Position "2-3-4"
By turning the knob counterclockwise to positions 2-3-4, you will get less rebound resistance accordingly.

Position 5: "MINIMUM EXTENSION DAMPING"
When the knob is fully turned counterclockwise, you will reach the position of minimum extension damping, giving the fork the maximum response.

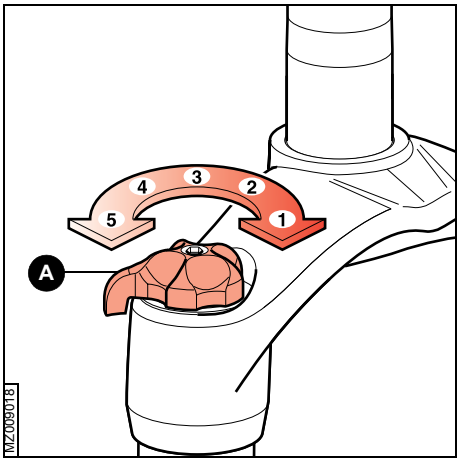

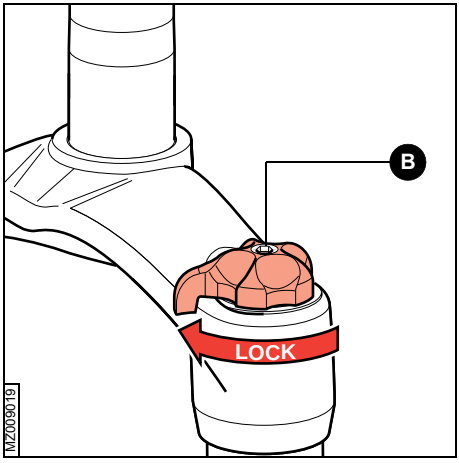

⚠ **ATTENTION**

Do not use the LOCK OUT n.1 position, for any reason, while riding hard downhill, as the fork could not react safely enough when hitting obstacles.

5.9 ETA

The ETA cartridge offers on-the-fly adjustment of the rebound damping by reducing the fork's length while still maintaining 30 mm of travel.
By turning the small lever (**B**) clockwise you will activate the ETA cartridge function.
By turning the small lever (**B**) counterclockwise, you will bring your fork to its normal function and the travel-reducing device will be no longer be engaged.

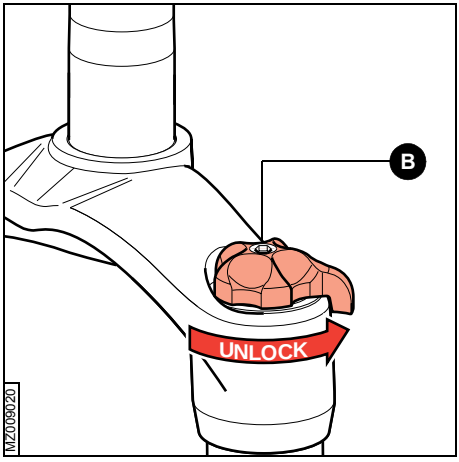

⚠ **ATTENTION**

Do not use the ETA device, for any reason, while riding hard downhill, as the fork could not react safely enough when hitting obstacles.

6 TABLES

Table 19: *Tightening torques*

Components to be tightened	Tightening Torque (Nm)
Wheel axle bolts	15 ± 1
Wheel axle allen bolts	10 ± 1
Fork's upper caps (all except 888 Series)	20 ± 1
Fork's upper caps (888 Series)	15 ± 1
Upper crown fixing bolts	6 ± 1
Lower crown fixing bolts	6 ± 1
Fender fixing bolts	6 ± 1
Handlebar clamp fixing bolts (all dual crown forks except 888 Series)	10 ± 1
Handlebar clamp fixing bolts (888 Series)	6 ± 1
ECC5 and ETA knobs fixing bolts	2 ± 0,5
Pumping rods and cartridges fixing foot nuts	11 ± 1
Cartridges fixing foot nuts	25 ± 1
Cantilever bolts fixing screws	11 ± 1
Pumping rods knobs fixing screws with lower, external adjustment	2 ± 0,5
Preload knobs fixing pins	1,5 ± 0,5
Air bleed screw	3 ± 0,5
Arch bolts (Monster series)	6 ± 1

Table 20: *Recommended positive air pressure for spring forks*

Positive air pressure	
0 ÷ 15 psi	0 ÷ 1 bar

Table 21: *Recommended positive air pressure for air forks*

Rider's weight		Positive air pressure	
120 ÷ 155 lbs	55 ÷ 70 kg	30 ÷ 40 psi	2.0 ÷ 2.75 bar
155 ÷ 180 lbs	70 ÷ 80 kg	35 ÷ 45 psi	2.40 ÷ 3.10 bar
180 ÷ 210 lbs	80 ÷ 95 kg	42 ÷ 52 psi	2.90 ÷ 3.80 bar
210 ÷ 220+ lbs	95 ÷ 100+ kg	52 ÷ 65 psi	3.60 ÷ 4.5 bar

Table 22: *Recommended negative air pressure*

Negative air pressure	
0 ÷ 150 psi	0 ÷ 10,3 bar

7 WARRANTY

If any component of your Marzocchi Suspension System is found to be defective in materials or workmanship within the term of this Limited Two Year Warranty (the “Agreement”), the defective component will be repaired or replaced, at the option of Marzocchi S.p.A., free of charge, within thirty (30) days after receipt of the Suspension System by an authorized Marzocchi dealer (for the USA, Marzocchi USA), freight prepaid, together with the original retail invoice or other evidence of the date of purchase.

1. **NOT COVERED:** This warranty does not cover damage resulting from accidents, alteration, neglect, misuse, abuse, or improper use, lack of reasonable or proper maintenance, improper assembly, repairs improperly performed or replacement parts or accessories not conforming to Marzocchi S.p.A.’s specifications, modifications not recommended or approved in writing by Marzocchi S.p.A., activities such as acrobatics, stunt jumping, ramp riding, racing, commercial use, and / or normal wear or deterioration occasioned by the use of the suspension system. Items subject to normal wear or deterioration include but are not limited to oil, dust seals, oil seals, and bushings. In addition, this warranty is void in the event that the forks are used with any rental bicycles, unless Marzocchi S.p.A provided prior approval in writing for such use. This warranty also does not include any expenses related to the transportation of the Marzocchi Suspension System to or from an authorized Marzocchi dealer (for the USA, Marzocchi USA), labor costs to remove the Marzocchi Suspension System from the bicycle, or compensation for inconvenience or loss of use while the Marzocchi Suspension System is being repaired. This warranty will be automatically void if serial number of the Marzocchi Suspension System is altered, erased, defaced or otherwise subject to any tampering.

2. **PURCHASER.** This warranty is made by Marzocchi S.p.A. with only the original purchaser of the Marzocchi Suspension System and does not extend to any third parties. The rights of the original purchaser under this warranty may not be assigned.

3. **TERM.** The term of this warranty shall commence on the date of purchase and shall continue for a period of two (2) years from the date of the original purchase.

4. **PROCEDURE.** In event of a defect covered by this warranty, the purchaser should contact an authorized Marzocchi dealer or a Marzocchi Service Centre (for the USA, Marzocchi USA).

5. **ENTIRE AGREEMENT.** This warranty supersedes any and all oral or express warranties, statements or undertakings that may previously have been made, and contains the entire agreement between the parties with respect to the warranty of this Marzocchi Suspension System. Any and all warranties not contained in this warranty are specifically excluded.

6. **DAMAGES.** Except as expressly provided by this warranty, Marzocchi S.p.A. **SHALL NOT BE RESPONSIBLE FOR ANY INCIDENTAL OR CONSEQUENTIAL DAMAGES ASSOCIATED WITH THE USE OF THE MARZOCCHI SUSPENSION SYSTEM OR A CLAIM UNDER THIS AGREEMENT, WHETHER THE CLAIM IS BASED ON CONTRACT, TORT OR OTHERWISE.** The foregoing statements of warranty are exclusive and lieu of all other remedies. Some states do not allow the exclusion or limitation of incidental or consequential damages, so this limitation or exclusion may not apply to you.

7. **DISCLAIMER. ANY IMPLIED WARRANTY OF MERCHANTABILITY OR FITNESS FOR A PARTICULAR PURPOSE AND ALL IMPLIED WARRANTIES ARISING FROM A COURSE OF DEALING, USAGE OF TRADE, BY STATUTE OR OTHERWISE, IS HEREBY STRICTLY LIMITED TO THE TERM OF THIS WRITTEN WARRANTY**. This Agreement shall be the sole and exclusive remedy available to the Purchaser with respect to this purchase. In the event of any alleged breach of any warranty or any legal action brought by the purchaser based

on alleged negligence or other tortious conduct by Marzocchi S.p.A. the Purchaser's sole and exclusive remedy will be repair or replacement of defective materials as stated above. No dealer and no other agent or employee of Marzocchi S.p.A. is authorized to modify, extend or enlarge this warranty.

8. **WARNING.** Always install, repair and use your Marzocchi Suspension System in strict compliance with it's owner's manual.

9. **OTHER RIGHTS.** This warranty gives you the specific legal rights, and you have also other rights which vary from state to state (USA only).

10. **APPLICABLE LAW.** Any disputes arising out of this agreement or the use of this Marzocchi Suspension System will be governed by the laws of the country of Italy and will be decided by the Courts of Bologna, Italy.

NOTE

Thank you for the purchase of this Marzocchi Suspension System. If any defect covered under the warranty appears with the agreed terms, send the Marzocchi Suspension System, postage prepaid, to an authorized dealer or to a Marzocchi Service Center (for the USA, Marzocchi USA) including a copy of the invoice or the ticket.
When doing so, please state your full name, address, date of purchase and explain the problem of defect.
The policy of Marzocchi S.p.A. is to offer corteous and efficient service with respect to warranty claims.
Please take care of your Marzocchi Suspension System and in case you suspect it can be damaged, please contact your dealer or a Marzocchi Service Center (for the USA, Marzocchi USA).

MARZOCCHI and BOMBER trademarks licensed by Marzocchi S.p.A.

NOTES

MARZOCCHI distributors and service centers

MARZOCCHI DISTRIBUTORS AND SERVICE CENTERS

EUROPE

COUNTRY	COMPANY
AUSTRIA	TRENDSPORT GmbH Südtirolerstr., 1 - A6911 LOCHAU – Austria Contact: Mr. Klaus Froeis Tel.: +43 (0)5574 47147 • Fax: +43 (0)5574 52334 Info@trendsport.co.at
BELGIUM	RAKBIKE S.A. Avenue Jeanne 13 – 1050 IXELLES - Belgium Contact: Rafi Kasparian Tel. +32 (0)2 6466682 • Fax +32 (0)2 6466682 Rakbike@wanadoo.be • www.rakbike.nethings.net
DENMARK	SCAN BIKE Frichsvej 17 – DK-8600 SILKEBORG - Denmark Contact: Lars Munskø Tel.: +45 (0)86 80 54 88 • Fax: +45 (0)86 80 54 75 scan-bike@email.dk
FINLAND	OY DUELL BIKE-CENTER AB Juhanilantie 4a - 01740 VANTAA – Finland Contact: Jussi Laurikainen Tel.: +358 (0)6 322 7500 • Fax: +358 (0)6 322 2231 info@duellbike.fi • www.duellbike.fi
FRANCE	PHILAMY S.A. 1384, Parc Industriel Saint-Maurice - F 04100 Manosque – France Contact: Derrick Coetzer Tel. +33 (0) 4 92 70 97 00 • Fax: +33 (0) 4 92 72 60 70 Info@philamy.com • www.philamy.com
GERMANY	COSMIC SPORTS GmbH Ipsheimerstr. 15-17 - D-90431 NÜRNBERG – Germany Tel. +49 911 31 07 55 0 • Fax: +49 911 3107 55 55 Info@cosmicsports.de • www.cosmicsports.de
ITALY	LARM SPA Via Cà dell'Orbo, 36 – 40055 Villanova di Castenaso (BOLOGNA) - Italy Tel. +39 0516053460 • Fax +39 0516053411 Sales@larm.it
OFFICIAL DISTRIBUTOR ALSO FOR: ALBANIA – TURKEY – GREECE – BOSNIA HERZEGOVINA – CROATIA – YUGOSLAVIA – SLOVENIA – MACEDONIAN – BULGARIA – HUNGARY – ROMANIA – POLAND - CZECH REPUBLIC – SLOVAKIA – MOLDAVIA – UKRAINE – BELARUS – LITHUANIA – LITTON – ESTONIA – RUSSIA – ASIA – OCEANIA – JAPAN - SOUTH AFRICA	
NORWAY	SPORTPARTNER AS POSTBOKS 555, BERGEN 5884 – Norway Tel. +47 55 50 6464 • Fax +47 55 50 6465 post@sportpartner.no • www.sportpartner.no

PORTUGAL	TAVARES & TIMMERMANS, Lda. Bike Center Condomínio Industrial de Alcolombal – Estrada de Alcolombal, Armazém 1 2705-833 TERRUGEM-SINTRA – Portugal Contact: Hans Timmermans Tel. +351 (0)21 961 06 21 • Fax +351 (0)21 961 06 38 bkecenter@mail.telepac.pt • www.bikecenter-pt.com
SPAIN	TEAM BIKE S.L. Elche Parque Industrial c/ Juan de la Cierva, 87 03203 Torrellano-Elche Alicante Spain Contact : Simon Tel.: +34 965 68 35 34 • Fax: +34 965 68 05 10 Info@teambike.es
SWEDEN	AVENIX AB Importgatan 17 – 422 46 HISINGS BACKA - Sweden Tel. +46 (0)31 52 20 00 • Fax +46 (0)31 52 20 10 Info@derbysweden.se • www.derbysweden.se
SWITZERLAND LIECHTENSTEIN	INTERCYCLE Haldenmattstr. 3 – CH-6210 SURSEE – Switzerland Tel.: +41 (0)41 9266511 • Fax: +41 (0)41 9266352 Info@intercycle.com • www.intercycle.com
THE NETHERLANDS LUXEMBURG	AUGUSTA BENELUX BV Roosveltstraat 46 – NL 2321 BM LEIDEN – The Netherlands Contact: Mr. Koeman • Tel. +31 (0) 71 5791580 • Fax +31 (0) 71 5323201 Marzocchi@augustabenelux.nl
UNITED KINGDOM IRELAND	***SOLENT UK Ltd***. t/a Windwave Unit 9 Clarence Wharf Industrial Estate – Mumby Road - GOSPORT Hants PO12 1AJ - UK Tel. +44 (0)23 92521912 • Fax +44 (0)23 92522625 Ofice@windwave.co.uk • www.windwave.co.uk

OTHER COUNTRIES

COUNTRY	COMPANY
AUSTRALIA	GROUPE SPORTIF PTY. LTD. 20 Harker Street, BURWOOD, Victoria 3125 – Australia Tel.: +61 3 9888 9882 • Fax: +61 3 9888 9902 help@groupesportif.com • www.groupesportif.com
BRAZIL	PLINIO CURI IMP. EXP.LTDS Rwa Pamplona 8185 Andar - 01405-030 SAO PAOLO – Brasil Tel.: +55 11 2510633 • Fax: +55 11 2515069 pcuri@ibm.net
CANADA	NORCO PRODUCTS LTD. 1465 Kebet Way PORT COQUITLAM, B.C. V3C 6L3 Canada Tel.: +1 604 552 2930 • Fax: +1 604 552 2948 Sales@norco.com • www.norco.com
PHILIPPINES	FAREN ENTERPRISES #59_E Bansalangin St., Project 7 - 1105 Quezon City – Philippines Tel. +632 372 2541 • Fax +632 372 2311 hansgee@mydestiny.net
ISRAEL	CYCLE TRADING COMPANY LTD. Hapardes Rd. RISHPON, Israel Tel.: +972 9 9513010 • Fax: +972 9 9509783 sales@ctc.co.il • www.ctc.co.il
KOREA	FOURS 69-6 Jeongja-Dong Bundang-Gu Seongnam-Si, KYONGGI-DO, Korea Tel.: +82 (0)31 719 6520/21 • Fax: +82 (0)31 719 6519 Fours1@yahoo.co.kr
SINGAPORE	CAPPA TRADING PTE. LTD. 85 Kaki Bukit Avenue , Shun Li Industrial Park SINGAPORE 417955 - Singapore Tel.: +65 8415151 • Fax: +65 8425133 cappa@pacific.net.sg
OFFICIAL DISTRIBUTOR ALSO FOR: MALAYSIA - INDONESIA - BRUNEI - THAILAND	
USA **SOUTH AMERICA**	MARZOCCHI USA 25213 Anza Drive – VALENCIA - CA 91355 USA Tel.: +1 661 257 6630 • Fax: +1 661 257 6636 Marzmail@marzocchiusa.com • www.marzocchi.com