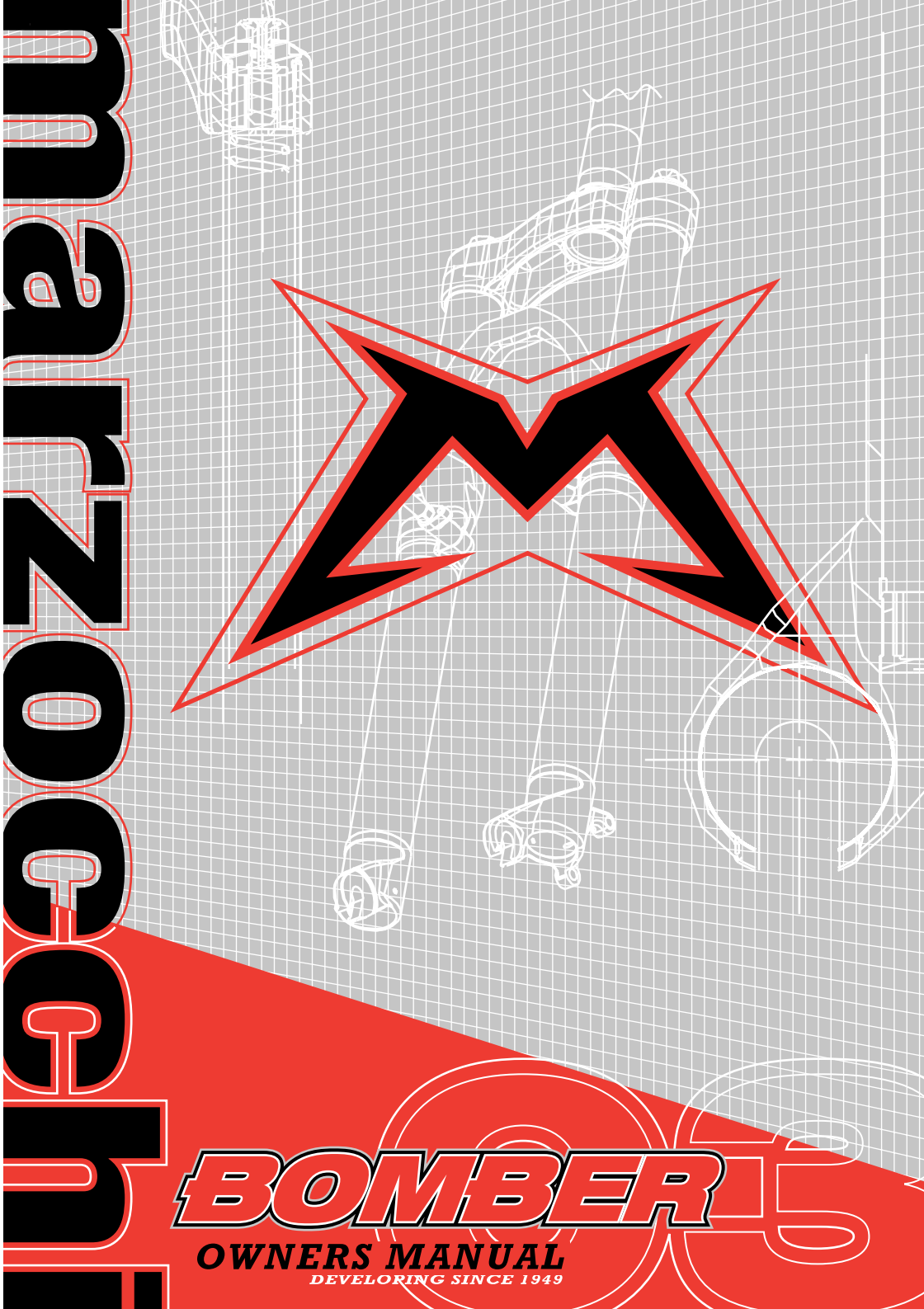
BOMBER
OWNERS MANUAL
DEVELOPING SINCE 1949

Italiano

English

Français

Deutsch

Español

# BOMBER 2003

**ISTRUZIONI PER L'USO E LA MANUTENZIONE**
**USE AND MAINTENANCE INSTRUCTION MANUAL**
**MODE D'EMPLOI ET ENTRETIEN**
**BETRIEBS - UND WARTUNGSANLEITUNG**
**INSTRUCCIONES PARA EL USO Y MANTENIMIENTO**

MZ001

English

## Important!

## The information you will find here below concerns your own safety! Please read it carefully.

1. REMEMBER THAT INCORRECT USE OF THE FORK CAN BE VERY DANGEROUS FOR YOUR OWN SAFETY. Carefully read this manual and follow all of the instructions. Never use a fork that is damaged in any way during an accident (oil leakage, bent or cracked components, etc). The fork must be regularly maintained throughout the use of the fork.
2. The fork must be repaired and overhauled by authorized technicians only. Take your fork to the shop where you bought it so they can send it to the Marzocchi Authorized Service Center in your country; this will protect your own safety and original spare parts only. Remember that not complying with this rule will void the warranty.
3. Each time that you use your fork, always remember to check that:
   - all fasteners are properly adjusted as shown in the manual (nuts, bolts, etc.);
   - the tires are inflated to the correct pressure;
   - none of the components are bent, damaged or out of alignment;
   - the brakes work perfectly, they are correctly installed and adjusted.
4. Take special care of:

- Installation on the frame. The installation on the frame and the steer tube setting must be carried out in compliance with the manufacturer's instructions. Do not make any modifications to the steer tube when installing the fork onto the frame.
- Components modifications. Do not make any modifications to the components; do not try to slide the stanchion tubes out, always make sure that the fork has the steer tube installed correctly and the disk brake mounts are perfectly aligned with the calipers. Do not change the position of the fork crown in regard to the stanchion tubes.

5. Marzocchi does not guarantee the installation and refuses all responsibility for damages and/or accidents that may be caused by an incorrect installation.
6. Not complying with any of the above precautions will immediately void the warranty.
7. Always follow the local bicycle laws and regulations and obey all traffic signals, signs and laws while you ride.

**General information.**
The fork you purchased was designed in compliance with the ISO TC 149 Norm (Safety for bicycles used off road and on rough ground).

MARZOCCHI S.p.A.
Via Grazia, 2 - 40069 Lavino di Zola Predosa - Bologna
ITALY
Tel - +39 - (0)51 - 61 68 711 - Fax - +39 - (0)51 - 75 88 57
marzocchi@marzocchi.it
http://www.marzocchi.com

# CONTENTS

**1 Introduction ... 36**
1.1 Conventions ... 36
1.1.1 Orientation of the fork ... 36
1.1.2 Editorial pictograms ... 36
1.2 Safety regulations ... 37
1.2.1 Preliminary controls before use ... 37
1.2.2 Correct behaviour principles during bike's use ... 37

**2 Technical information ... 38**
2.1 Use applications ... 38
2.2 Fork's external components ... 39
2.2.1 Marathon - Mx series ... 40
2.2.2 Marathon - Mx series for 29" wheel ... 41
2.2.3 Z.1 - Dirt Jumper ... 42
2.2.4 JR.T - Super T Pro ... 43
2.2.5 Shiver SC ... 44
2.2.6 Shiver DC ... 45
2.3 Fork's internal components and fork's operation ... 46

**3 Installation ... 48**
3.1 Installation on the frame ... 48
3.2 Installing the brake system ... 48
3.3 Fender installing ... 50
3.4 Wheel installing with a standard fork's end ... 50
3.5 Wheel installing with a QR20 Plus fork ... 50
3.6 Wheel installing with a Shiver fork ... 51

**4 Maintenance ... 52**
4.1 Problems – Diagnosis – Solutions ... 52
4.2 Periodical maintenance table ... 53
4.3 General safety regulations ... 53
4.4 Cleaning the fork legs and the dust seals ... 54

**5 Adjustments ... 55**
5.1 Preload ... 56
5.1.1 Spring preload ... 56
5.1.2 Air preload ... 57
5.2 Negative air ... 58
5.3 Cartridge forks rebound adjustment ... 59
5.4 Externally adjustable forks with SSV rebound adjustment ... 59
5.5 Internally adjustable forks with SSV rebound adjustment ... 60
5.6 ECC5 ... 61
5.7 ETA ... 61

**6 Tables ... 62**
6.1 Table 1 – Tightening Torques ... 62
6.2 Table 2 – Positive air pressure ... 62
6.3 Table 3 – Negative air pressure ... 62

**Notes ... 63**

English

# 1 INTRODUCTION

Carefully read the instruction given in this manual and keep it for future reference.
This manual contains important information regarding the use and adjustment of the suspension system that you have chosen and must therefore be read with extreme care. If you have any questions regarding the care and maintenance of your suspension system, please contact your nearest service center directly. A list of service centers can be found on the last page of this manual or on the Internet page www.marzocchi.com.

This manual does not explain how to assemble/disassemble the fork from the bicycle, the wheel, the steering set or any other component directly or indirectly associated with the fork that are not actually a part of the fork.

The manufacturer therefore reserves the right to make changes to the products, at any time and without prior notice to improve the products or to meet any productive or commercial requirements.
The user is are the only person responsible for the correct application of the assembly instructions in the present manual.
Always ride in the full respect of the safety regulations, taking the greatest care.

English

## 1.1 Conventions

### 1.1.1 Orientation of the fork

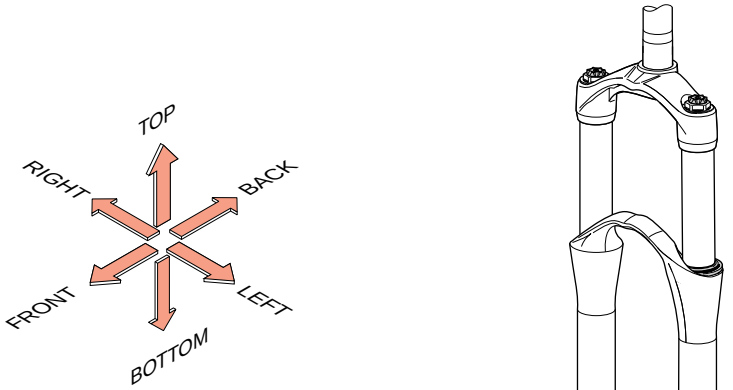


MZ001001

### 1.1.2 Editorial pictograms

Descriptions inside the grey boxes contain information, instructions or procedures, which, if not respected, can cause damage to the forks, injury to the user or damage to the environment.

*Descriptions in italic contain information, prescriptions or procedures recommended by MARZOCCHI for the best fork's use.*

## 1.2 Safety regulations

Please be advised that if the procedures provided in this manual are not properly performed, or if the instructions in this manual are not followed, an accident could occur, resulting in serious injury or death of the rider.

Please note that throughout this manual, reference is made that “an accident” could occur. Any accident could result in damage to your bicycle, its components, and, more importantly, could cause you or a bystander to sustain severe personal injury or even death.

- Always strictly follow the given periodical maintenance table (see. Par. 4.2)
- Always use original MARZOCCHI spare parts.
- Never make any modifications whatever to the suspension system.
- Parts that have been bent or otherwise damaged in an accident, or as a result of any other impact must not be re-straightened. They must be replaced immediately with original MARZOCCHI parts.
- Call directly the Service center closest to you for comments, questions or problems. You will find it on the web site (www.marzocchi.com)

### 1.2.1 Preliminary controls before use

Before using the bicycle, always carry out following tests:

- Make sure that all quick release fasteners, nuts and bolts are properly adjusted.
- Bounce the bicycle on the ground and make sure all components remain in the correct position.
- Be sure that your tires are inflated to the correct pressure and that the tread or sidewall are not damaged.
- Be sure that none of the components of your bicycle are bent, damaged or out of alignment.
- Test your brakes in the beginning of your ride to make sure that they are operating properly.
- Check all reflectors to make sure that they are clean, straight and securely mounted.

### 1.2.2 Correct behaviour principles during bike’s use

- Follow the local bicycle laws and regulations and obey all traffic signals, signs and laws while you ride.
- Wear close-fitting clothes and which make you visible to traffic, such as neon, fluorescent, or other bright colors.
- Avoid biking at night, because visibility is lower and it is more difficult for you to see obstructions on the ground. If you do ride at night, you must equip your bicycle with a headlight and a taillight.
- When riding in wet conditions, the breaking power is greatly reduced and the adherence of the tires on the ground is considerably reduced. This makes it harder to control and stop your bicycle. Extra care is therefore required when riding in such conditions, to avoid an accident.
- Always wear a bicycle protection helmet approved by ANSI or SNELL; it must be of the right size and properly fastened.

# 2 TECHNICAL INFORMATION

## 2.1 Use applications

You will find in the following table the use applications of Marzocchi forks.

Do not use forks for an application that is different from the one provided by the manufacturer.

| | M | A-XC | XC | DJ | FR | FR-DH |
|---|---|---|---|---|---|---|
| MARATHON SL * | | | | | | |
| MARATHON S * | | | | | | |
| MX PRO W / ETA * | | | | | | |
| MX PRO * | | | | | | |
| MX COMP W / ETA * | | | | | | |
| MX COMP * | | | | | | |
| DIRT JUMPER I | | | | | | |
| DIRT JUMPER II | | | | | | |
| DIRT JUMPER III | | | | | | |
| SHIVER SC | | | | | | |
| Z. 1 FR SL | | | | | | |
| Z. 1 FR | | | | | | |
| Z. 1 DO | | | | | | |
| JR T | | | | | | |
| SUPER T PRO | | | | | | |
| SHIVER DC | | | | | | |

| | |
|---|---|
| M | Marathon Enduro: for marathons and cross-country |
| A-XC | Aggressive Cross Country: for an aggressive cross-country use |
| XC | Cross-country: for medium trails and touring |
| DJ | Slalom Dirt Jumper: for Dirt Jumping and Dual Slalom |
| FR | Free Ride: for use on demanding trails |
| FR-DH | Extreme Freeride / Downhill Racing: specific for Downhill |

(*) Suitable fork for cross-country, touring and off road use only. For cross-country races and marathons. Non suitable for extreme use like free style. DO not use for jumping.

English

MZ001

## 2.2 Fork's external components

Apart from a few exceptions, the new MARZOCCHI fork designs consists of two main assemblies: the stanchion tubes / steering crown assembly (which are assembled through a cryogenic process called "cryofit" for a stiff and undetachable fit) and the magnesium-molded sliders/arch monolith assembly.

The materials used are the BAM® aluminium from the aerospace industry and magnesium; these are lightweight materials that help reduce the fork's weight.

The system for securing the wheel axle to the fork sliders can be standard, with traditional advanced dropouts (**A**) or with the QR20 Plus system (**B**).
Forks using this system (**B**) must use a suitable hub with 110 mm width spacing and a 20 mm wheel axle.
**QR20 Plus 2003**: is the new, sophisticated version of the QR20 system that fully wraps the 20 mm wheel axle, for maximum stiffness, while still providing an easy way to remove the wheel. The new QR20 Plus 20 mm axle system uses a forged aluminium hinge that is permanently attached to the magnesium sliders to clamp the axle. The forged aluminium quick-release lever makes opening and closing the flap routine.
The 20 mm wheel axle used in this system can be the quick-release type or the bolt-on type.

The upside down forks (Shiver SC and Shiver DC) are provided with a wheel fastening system originating from the motorcycle application, using a 20 mm axle (**C**).

**FENDER:** Marzocchi offers an integrated fender option for the new Z1's, DJ's, Super T Pro and Jr T's. It mounts to the underside of the crown to help protect the rider against debris from the front tire.

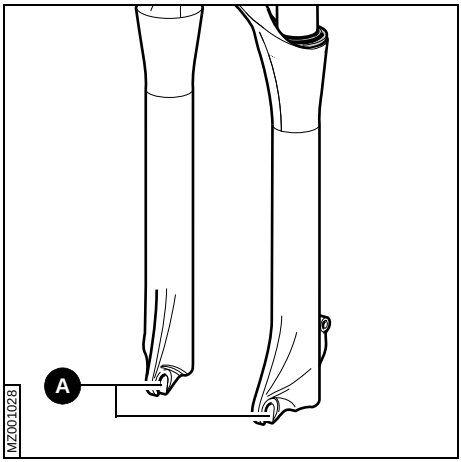


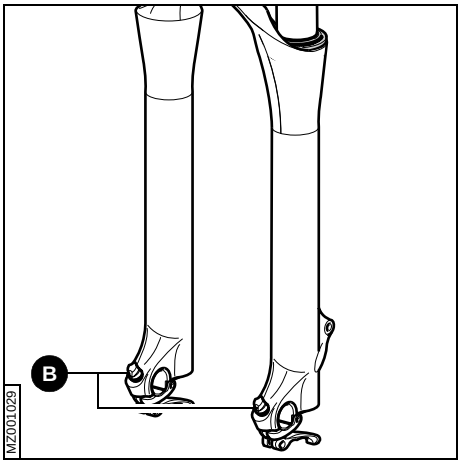


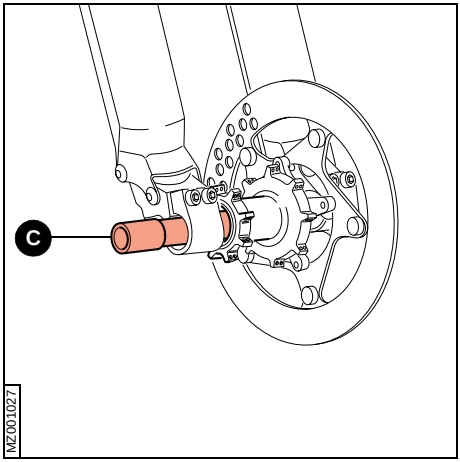




English

### 2.2.1 Marathon - Mx series

| | | MARATHON | | MX | |
|---|---|---|---|---|---|
| TRAVEL (C) | mm | 85 | 105 | 85 | 105 |
| A (max) | mm | 458 | 478 | 458 | 478 |
| A (min) | mm | 373 | 373 | 373 | 373 |
| B | mm | 427 | 447 | 429 | 449 |
| Drop out type | | Standard | | | |
| Disk brake mounts | | XC International Standard for 6” disk | | | |
| Brake type<br>Cantilever or V-Brake | | YES | | | |
| Options | | / | | | |

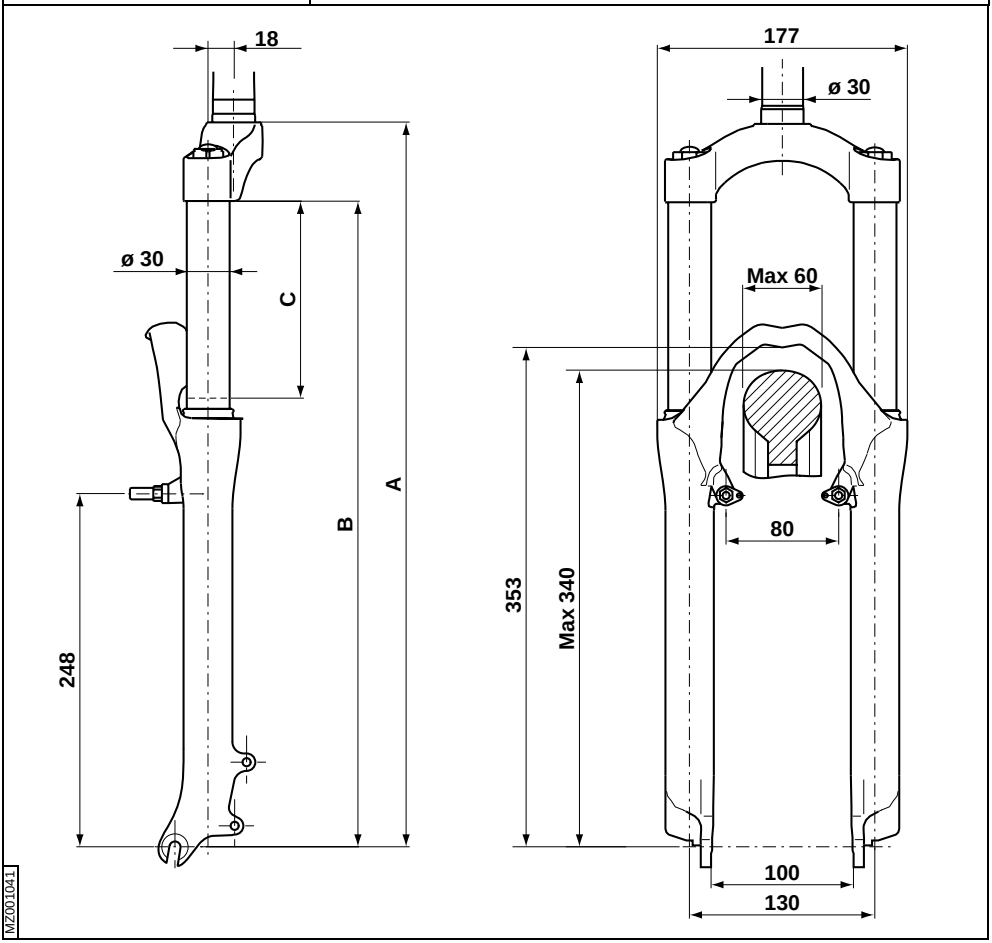


Indicative sizes



English

## 2.2.2 Marathon - Mx series for 29” wheel

| | | MARATHON | MX |
|---|---|---|---|
| TRAVEL (C) | mm | 75 | 75 |
| A (max) | mm | 485 | 485 |
| A (min) | mm | 410 | 410 |
| B | mm | 454 | 456 |
| Drop out type | | Standard | |
| Disk brake mounts | | XC International Standard for 6” disk | |
| Brake type<br>Cantilever or V-Brake | | YES | |
| Options | | / | |

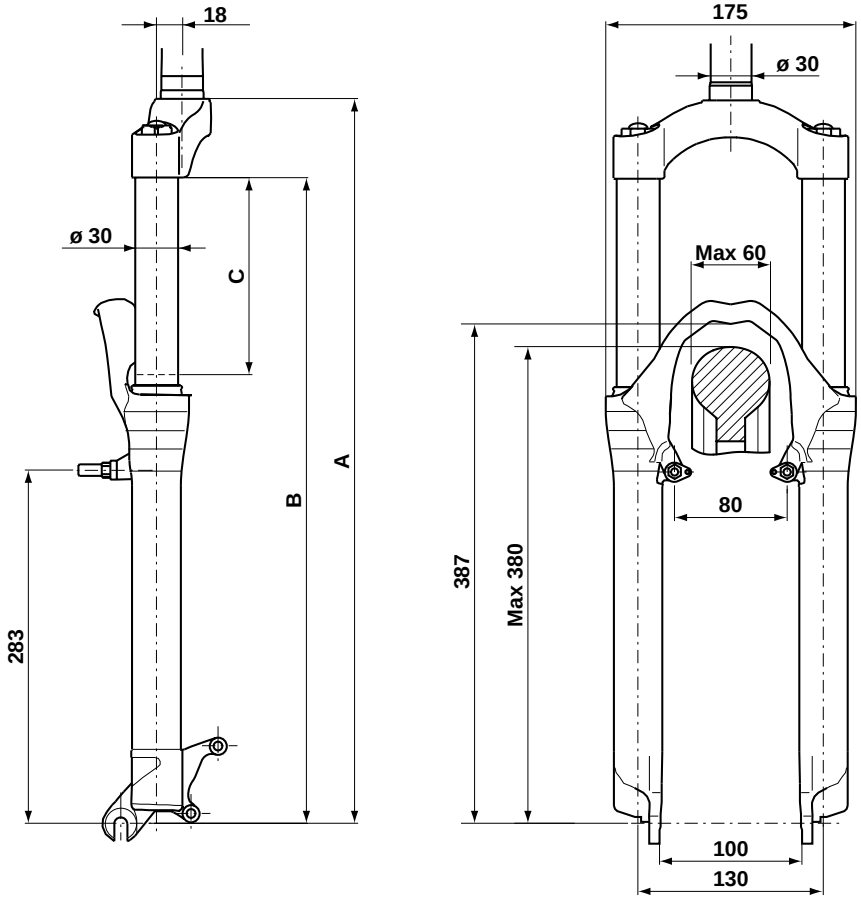




Indicative sizes

English

### 2.2.3 Z.1 - Dirt Jumper

| | | Z. 1 | DIRT JUMPER | |
|---|---|---|---|---|
| TRAVEL (C) | mm | 130 | 110 | 130 |
| A (max) | mm | 518 | 498 | 518 |
| A (min) | mm | 388 | 388 | 388 |
| B | mm | 488 | 468 | 488 |
| Drop out type | | Standard or QR20 Plus (DJ III standard system) | | |
| Disk brake mounts | | Standard drop outs: XC International Standard for 6” disk<br>QR20 Plus drop outs: DH International Standard for 8” disk | | |
| Brake type<br>Cantilever or V-Brake | | / | | |
| Options | | Integrated fender | | |

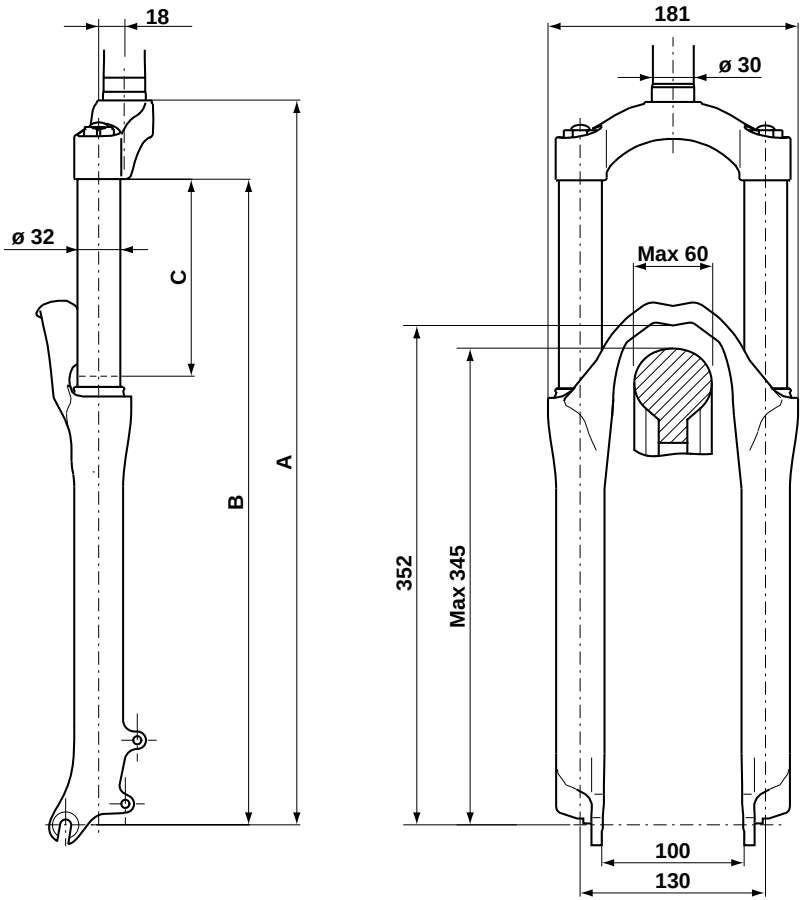


MZ001043

English

Indicative sizes

MZ001

### 2.2.4 JR.T - Super T Pro

| | | JR. T | SUPER T PRO |
|---|---|---|---|
| TRAVEL (C) | mm | 170 | 170 |
| A (max) | mm | 558 | 558 |
| A (min) | mm | 388 | 388 |
| B | mm | 528 | 528 |
| Drop out type | | Standard or QR20 Plus | QR20 Plus |
| Disk brake mounts | | Standard drop outs: XC International Standard for 6” disk QR20 Plus drop outs: DH International Standard for 8” disk | DH International Standard for 8” disk |
| Brake type Cantilever or V-Brake | | / | |
| Options | | Direct mount handlebar clamp (long or short) | |

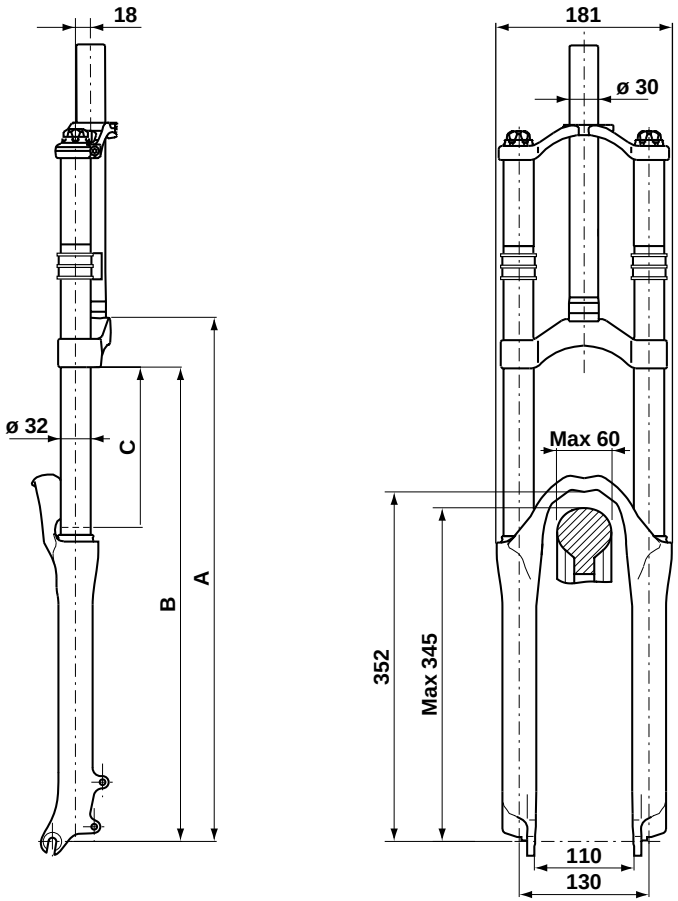


MZ001044

Indicative sizes



English

## 2.2.5 Shiver SC

| | | SHIVER SC |
|---|---|---|
| TRAVEL (C) | mm | 120 |
| A (max) | mm | 503 |
| A (min) | mm | 383 |
| B | mm | 475 |
| Drop out type | | 20 mm aluminium dedicated axle |
| Disk brake mounts | | DH International Standard for 8” disk |
| Brake type<br>Cantilever or V-Brake | | / |
| Options | | / |

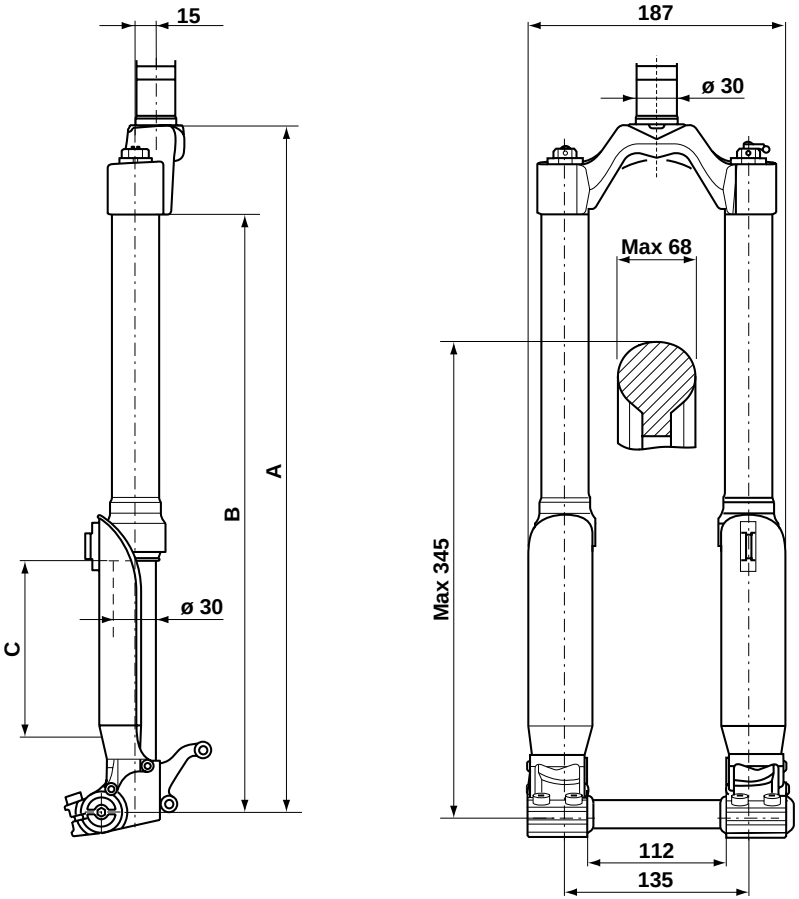


Indicative sizes



English

## 2.2.6 Shiver DC

| | | SHIVER DC |
|---|---|---|
| TRAVEL (C) | mm | 190 |
| A (max) | mm | 572 |
| A (min) | mm | 382 |
| B | mm | 545 |
| Drop out type | | 20 mm aluminium dedicated axle |
| Disk brake mounts | | DH International Standard for 8” disk |
| Brake type<br>Cantilever or V-Brake | | / |
| Options | | Direct mount handlebar clamp (long or short) |

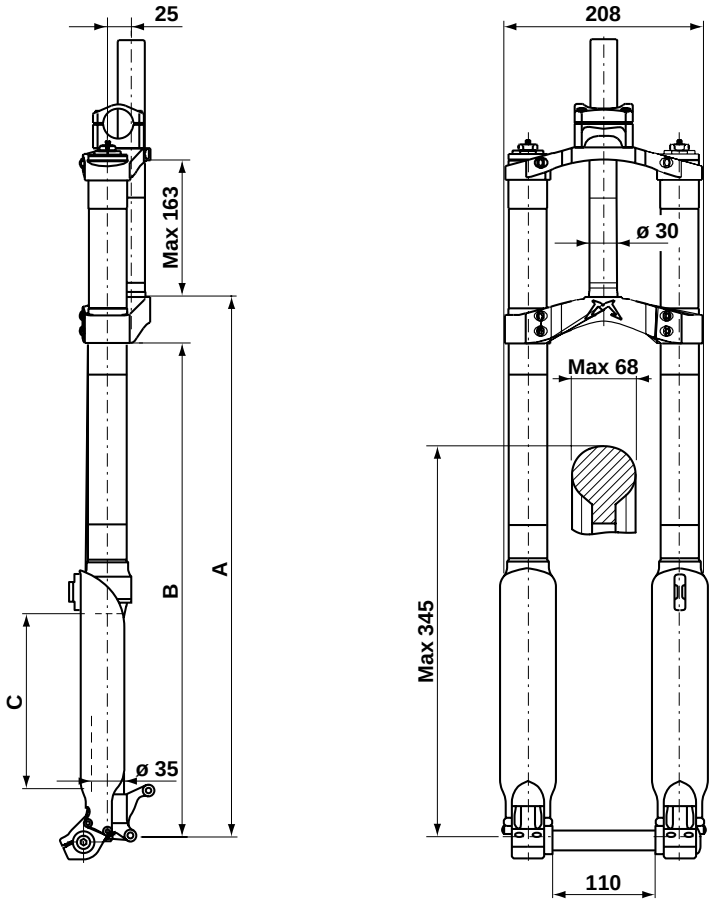


MZ001046

English

MZ001

Indicative sizes

## 2.3 Fork's internal components and fork's operation

Inside MARZOCCHI forks you will find coil springs or air as a spring system.

The damping load that is generated during the fork legs compression and rebound, can be adjusted by cartridges, controlled by external adjusters, or by special hydraulic valve pumping rods, which operate according to compression speed (Speed Sensitive Valving).

Pumping rods can be controlled by external or internal adjusters, or they can have a fixed setting.

Cartridges and pumping rods are fully emerged in oil (Open Bath System). This system provides proper lubrication and cooling of the inner sliding parts; furthermore, the oil volume works as a damping and setting element.

The Open Bath system reduces the maintenance frequency compared to a sealed cartridge system.



Stanchion tubes are guided in the sliders by two teflon-coated bushings, free from static friction.

The seal system prevents oil leaks and contamination from particles entering the fork. It uses a special dual-lip oil seal and a dust seal at the top of each slider.

You will find here below the different fork damping systems:

**ECC5**: the new Extension Control Cartridge offers on-the-fly adjustment of the rebound damping with a 5-position clicker. Use the fast rebound position for downhilling, the 3 middle positions for race start sprints and rough climbing and the fully closed ECC position for steep dirt switchback climbs or Marathon style road climbs.

**ETA**: the new Extension Travel Adjustment locks down the rebound damping like the standard ECC, but still allows 25 - 30mm of travel.

**HSCV**: the High-Speed Compression Valve (HSCV) allows lighter damping for better trail sensitivity but still resists bottoming. It is the best way to provide a controlled damping environment for consistent and perfect damping. The moving valve on the shaft controls rebound and low-speed compression damping. The special valve in the bottom of the cartridge (HSCV), takes the edge of any hard hit to maintain control.

**SSV**: the Speed Sensitive Valve (SSV) uses 5 valve circuits to control damping rates based on the fork's compression and rebound speed as well as the fork's position in the travel.

**SSVF**: The latest version of our Speed Sensitive Valve has a new Floating valve and spring design. It incorporates a spring-loaded valve, which is more responsive and uses an external rebound adjuster.

| Fork | Damping system | |
|---|---|---|
| | Right leg | Left leg |
| Marathon SL | ECC5 hydraulic cartridge | Pneumatic cartridge, negative air |
| Marathon S | HSCV cartridge | ETA cartridge |
| Marathon SL 29’ | ECC5 hydraulic cartridge | Pneumatic cartridge, negative air |
| MX Pro W/ETA | SSVF pumping rod with floating valve and external adjustment | ETA cartridge |
| MX Pro Air | SSVF pumping rod with floating valve and external adjustment | / |
| MX Pro Coil | SSVF pumping rod with floating valve and external adjustment | / |
| MX Pro W/ETA 29’ | SSVF pumping rod with floating valve and external adjustment | ETA Cartridge |
| MX Comp W/ETA | SSV pumping rod with internal adjustment | ETA Cartridge |
| MX Comp Air | SSV pumping rod with internal adjustment | SSV pumping rod with internal adjustment |
| MX Comp Coil | SSV pumping rod with internal adjustment | SSV pumping rod with internal adjustment |
| MX Comp Coil 29’ | SSV pumping rod with internal adjustment | SSV pumping rod with internal adjustment |
| Z1 FR SL | ECC5 hydraulic cartridge | Pneumatic cartridge, negative air |
| Z1 FR | HSCV cartridge | ETA cartridge |
| Z1 Drop Off | SSVF pumping rod with floating valve and external adjustment | ETA cartridge |
| Dirt Jumper I | SSVF pumping rod with floating valve and external adjustment | / |
| Dirt Jumper II | SSV pumping rod with internal adjustment | SSV pumping rod with internal adjustment |
| Dirt Jumper III | Non-adjustable SSV pumping rod | Non-adjustable SSV pumping rod |
| Junior T | SSV pumping rod with floating valve and internal adjustment | SSV pumping rod with floating valve and internal adjustment |
| Super T Pro | HSCV cartridge | HSCV cartridge |
| Shiver SC | HSCV cartridge | ETA cartridge |
| Shiver DC | HSCV cartridge | HSCV cartridge |

# 3 INSTALLATION

## 3.1 Installation on the frame

The fork is supplied with “A-Head Set” (threadless) steer tube to be cut according to frame size it will be used on.
Installing a MARZOCCHI fork on the bicycle frame is a very delicate operation that must be carried out by specialized personnel.

The assembling on the frame and the steer tube adjustment must be carried out in compliance with the manufacturer’s instructions. Improper installation may jeopardize the safety of the rider.
Marzocchi does not guarantee the installation and refuses all responsibility for damages and/or accidents that may be caused by an incorrect installation.

The steer tube must be pressed into the crown; its replacement must be carried out by one of our service centers only, using the required tools.

In case of improper installation of the steer tube into the crown, the rider might lose control of his/her bicycle, thus jeopardizing his/her safety.
On the SHIVER DC model, the sliders are clamped to the lower crown through some bolts: before the installation on the frame, it is therefore necessary to control the bolts tightening, and to make sure that the distance “**D**” between the lower crown and the tire end (inflated) is total travel T+3 mm.

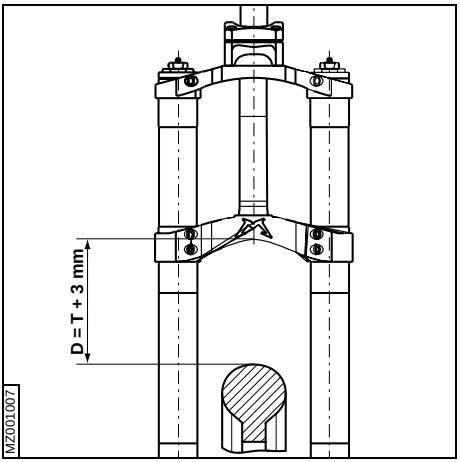


## 3.2 Installing the brake system

Assembling the brake system is a very delicate operation that must be carried out by specialized personnel.

Marzocchi does not guarantee the assembly and refuses all responsibility for damages and/or accidents that may be caused by an incorrect assembly.
Improper installation of the disk brake system can overstress the caliper mountings, which may break. The brake system assembling must be carried out in compliance with brake system’s manufacturers instructions. Improper installation may jeopardize the safety of the rider.
Only use brake systems that are complying with the fork’s specifications, considering that:

- On Ø 32 stanchions forks and Upside down forks you can exclusively assemble disk brake systems.

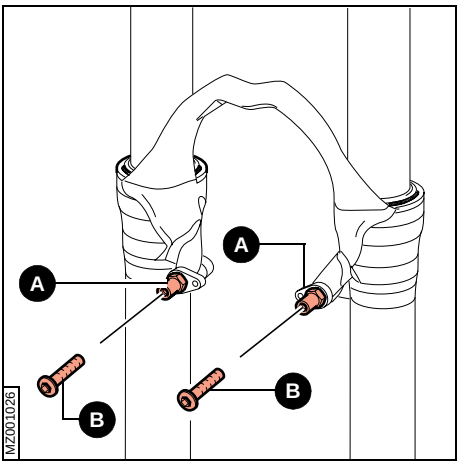




English

- Ø 30 mm stanchions forks can be previously provided with disk brake assembling accessories or with Cantilever or V-Brake systems assembling accessories.

- Specialized personnel only can change one brake system type into the other one.

- The monolith sliders-arch of 29” wheel forks is made through assembling and not through casting, therefore, apart from retaining cantilever or V-brake levers, the bolts (**A**) also secure the upper area of the sliders to the arch. In case of disk brake assembling, the service centers may replace the brake boss bolts (**A**) with button head bolts (**B**).

- On the bolts thread (**A, C**) and on the button head bolts thread (**B**) a special thread-lock treatment is applied; removed bolts can therefore never by reused, as they lose such treatment.

- The user cannot, in any case, remove the bolts (**A**, **C**) or the button head bolts (**B**).

- Do not replace the bolts (**C**) with commercial bolts.

- In case of assembling of disk brake system, make sure before every ride that the brake system tube is correctly connected to the proper mounting (**D**, **E**).

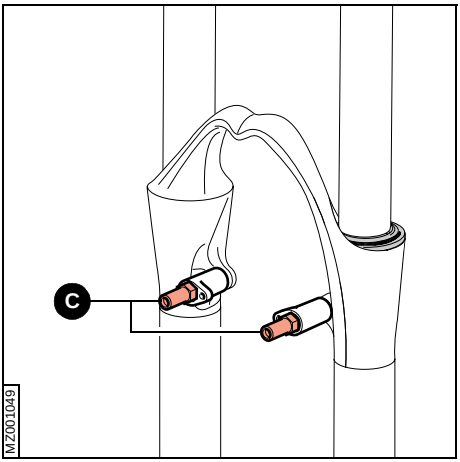


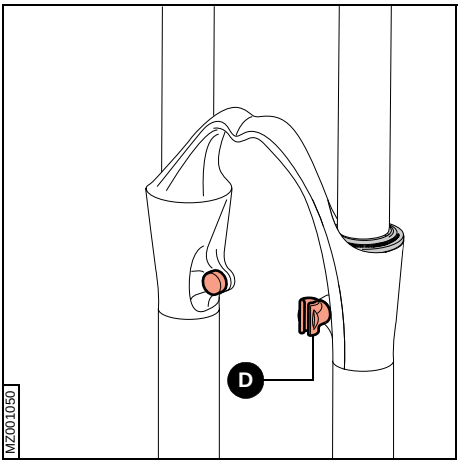


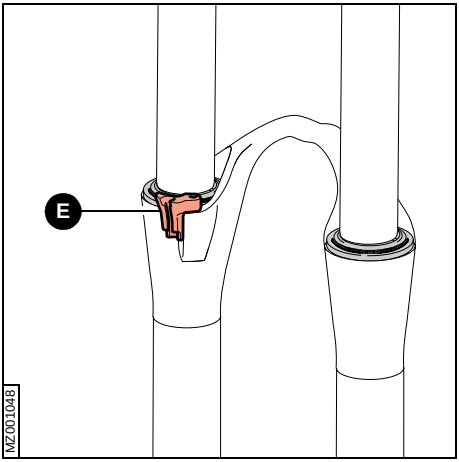


English

## 3.3 Fender installing

An integrated fender can be installed on ø32mm-stanchion forks. The fender can be supplied with the fork or bought separately. The istallation of the fender (**F**) must be carried out as shown in the picture, tightening the bolts (**G**) using a 8mm allen key to the required tightening torque (see Table 1 - Tightening Torques).

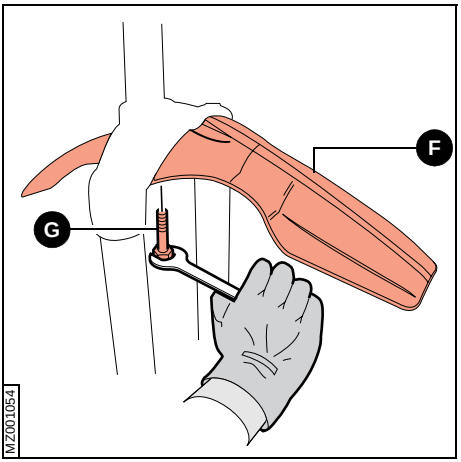


## 3.4 Wheel installing with a standard fork's end

Install the wheel in compliance with the manufacturer's instructions.

For correct fork function after wheel installing you will need to:

- check the correct fork-wheel alignment by fully compressing the fork a few times.
- lift the front wheel, turn the wheel a few times to verify the correct alignment with the disk brake.

## 3.5 Wheel installing with a QR20 Plus fork

For correct fork function, please follow the instructions here below when installing the wheel:

- Release the securing system on both legs by pushing the levers (**A**) downwards.
- For quick-release models, open the release lever (**B**).
- For threaded cap models, unscrew the cap (**C**) as much as needed to insert the wheel axle through the fork wheel axle clamp.
- Insert the wheel axle (**D**) through the fork wheel axle clamp.
- Make sure that the wheel axle supporting nuts (**E**) are centered in the sliders' seat
- If the wheel axle is provided with quick-release system, lock the wheel with the quick-release lever (**B**); otherwise, tighten the cap positioned on the axle side using a 6 mm Allen key to the required tightening torque (see Table 1 – Tightening Torques).
- Verify the correct settling of the supporting nuts (**E**).
- Check the correct fork-wheel alignment, by fully compressing the fork a few times.
- Lift the front wheel; turn the wheel a few times to verify the correct alignment with the disk brake.
- Lock the securing system by pulling the levers (**A**) upwards and adjust clearance through the adjusters (**H**), if needed.

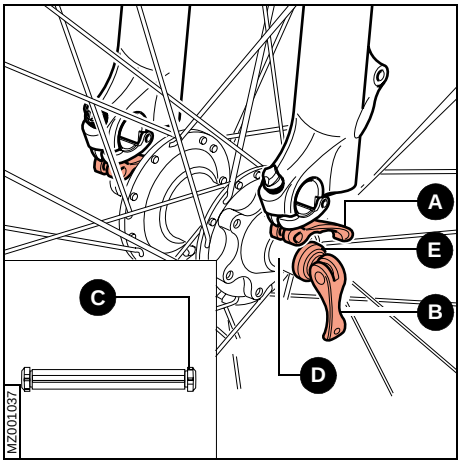


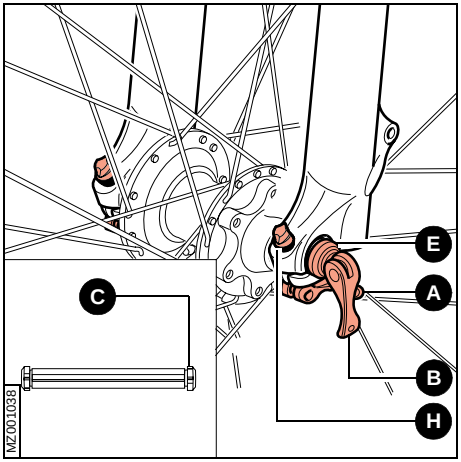


MZ001

English

## 3.6 Wheel installing with a Shiver fork

For correct fork function, please follow the instructions here below when installing the wheel:

- Insert the wheel axle (**A**) through the right wheel axle clamp, the wheel and the left wheel axle clamp.
- Screw down the bolt (**B**) on the left side and tighten to the required torque (see Table 1 – Tightening Torques).
- Fully compress the fork a few times to properly align the fork legs.
- Tighten to the required torque (see Table 1 – Tightening Torques) the bolts (**C**) positioned on both dropouts.

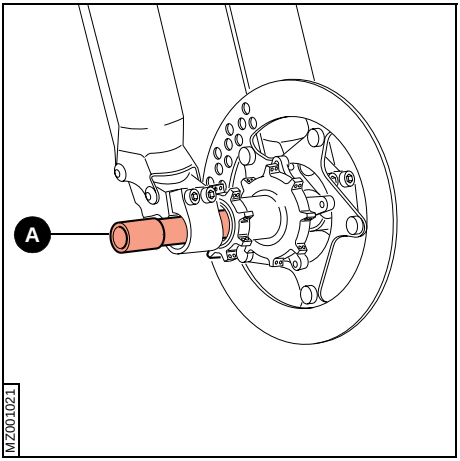


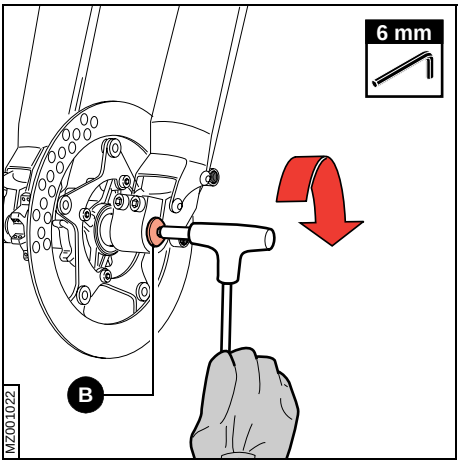


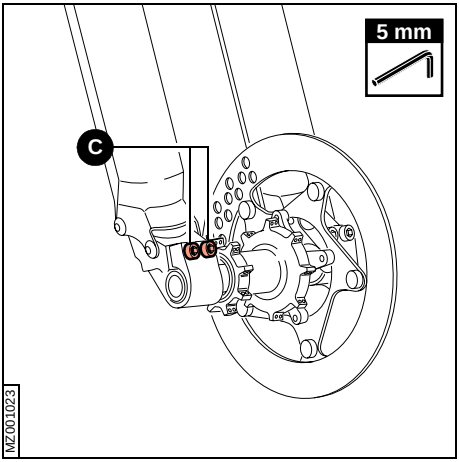

# 4 MAINTENANCE

## 4.1 Problems – Diagnosis – Solutions

This paragraph indicates some of the problems that may arise during the fork's use, as well as the possible causes of these problems and the suggested solutions.
Always check this table before working on the fork.

Operations inside the grey box must be carried out by authorized service centers.

| Problem | Diagnosis | Solution |
|---|---|---|
| Fork has too much sag | Spring rate too soft | Add spring preload |
| | | Change to stiffer spring rate |
| Fork bottoms too easily; needs more than maximum preload to attain proper sag | Spring rate too soft or fork oil too low | Check oil height |
| | | Get stiffer springs |
| | | Increase air pressure |
| Forks bottoms too easily, but it has the recommended sag | Not enough compression damping | Increase compression damping by changing oil level |
| Fork does not get full travel | Spring rate too stiff or fork oil too high | Check oil height |
| | | Get softer spring |
| | | Decrease air pressure |
| Fork extends too quickly; harsh top-out after impacts | Not enough rebound damping | Increase rebound damping |
| | | Replace oil (SAE 7,5) with a higher viscosity |
| Front wheel wants to tuck under while cornering | Too much rebound damping; spring rate too soft | Decrease the rebound damping |
| | | Increase spring rate |
| Fork "packs up" or stays down in travel during multiple impacts | Too much rebound damping | Decrease rebound damping |
| Knocking sound during rebound, but no harsh top-out | Too much rebound damping | Decrease rebound damping |
| Oil "ring" on stanchions | Oil seals are contaminated | Replace all seals (repair the fork before using it again) |
| Heavy amount of oil on stanchions; oil dripping down legs | Seals are damaged, stanchions could be damaged | Replace all seals and have the stanchions inspected (repair the fork before using it again) |
| Fork is sticky; fork does not perform as new | Oil seals are contaminated; fork needs to be serviced | Replace all seals (repair the fork before using it again) |
| Oil leakage from the bottom | Loose bottom nut | Tighten bottom nut |
| | Bottom nut o-ring damaged | Replace bottom nut o-ring |
| Loss of sensitivity | Worn sliding bushings | Replace sliding bushings |
| | Old oil | Change oil |

## 4.2 Periodical maintenance table

| General maintenance operation | Use | |
|---|---|---|
| | Intense | Normal |
| Stanchion and dust seal cleaning | After every ride | |
| Air pressure control | Before every ride | 10 hours |
| Oil change | 50 hours | 100 hours |
| Oil seals replacement | 100 hours | 200 hours |



## 4.3 General safety regulations

After a complete breakdown, always use new seals when reassembling.

To tighten two bolts or nuts that are near each other, always follow the sequence 1-2-1 using the required tightening torque (see Table 1 – Tightening Torques).

Never use flammable or corrosive solvents to clean the parts, as these could damage the seals. If necessary use specific detergents that are not corrosive, not flammable or have a high flash point, compatible with the seals materials and preferably biodegradable.

If you are planning not to use your fork for a long time, always lubricate the forks components that are in contact with some fork's oil.

Never pour lubricants, solvents or detergents which are not completely biodegradable in the environment; these must be collected and kept in the relevant special containers, then disposed of according to the regulations in force.

Use only metric spanners, not imperial spanners, which may have similar sizes, but can damage the bolts and make it impossible to unscrew them.

Use the correct size and sort of screwdriver to unscrew slotted or crosshead screws.

When using a screwdriver to assemble or disassemble metal stop rings, o-rings, sliding bushings or seal segments, avoid scratching or cutting the components with the screwdriver tip.

Only proceed to maintenance/overhaul operations if you are sure you are able to do it and you have got the right tools. If this is not the case, or if you are unsure, please contact an authorized service center, where specialized technicians with the right tools and original spare parts will service and overhaul your fork, putting it back into its original working conditions.

Only use original spare parts.

Work in a clean, ordered and well-lit place; if possible, avoid servicing outdoors.

Polished surfaces need to be periodically treated with some "polishing compound" to be kept as bright as new.

Carefully check there are no metal shavings or dust in the work area.

Do not modify the fork's components.

## 4.4 Cleaning the fork legs and the dust seals

*The manufacturer lubricates the fork dust seal with some grease, which makes the stanchion tubes slide easier, especially when the fork has not been used for a long time.*
*When using the fork, such grease can melt and stick to the stanchions, looking like an oil leak, although it is not.*

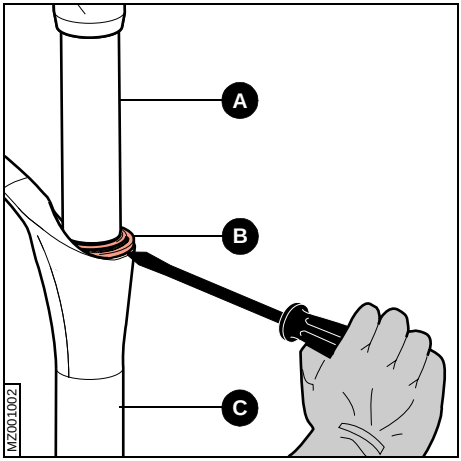


- Carefully clean the stanchion tube (**A**) after every use.
- With a small screwdriver pry the dust seal (**B**) off the slider (**C**), avoiding scratching the stanchion tube.
- Slide the dust seal along the stanchion tube and clean inside the dust seal and its seat on the slider with a jet of compressed air.

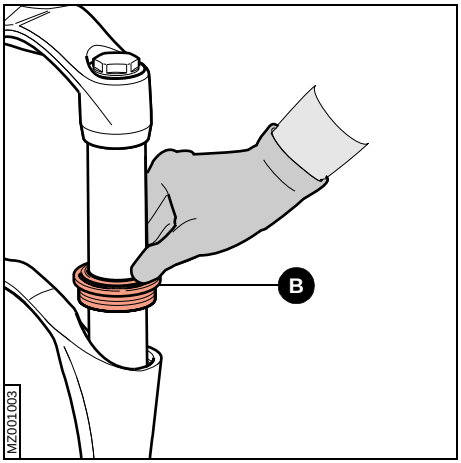


*It is advisable to tip the fork's leg to make the pouring of any particles easier.*

Never use metal tools to clean any particles of dirt.

- Compress the fork legs slightly and remove any traces of dirt from the stanchion tubes.
- Lubricate the dust seal and the visible surfaces of the oil seal with some silicon grease.
- Re-assemble the dust seal (**C**) in its seat, pressing it with your hands.

English

# 5 ADJUSTMENTS

Please visit our web site www.marzocchi.com for any information concerning the travel increase kit and for different spring rates (**K**).

| Fork | PL | A+ | A- | REBC | PRe | PRi | ECC5 | ETA |
|---|---|---|---|---|---|---|---|---|
| MARATHON SL | | ● | ● | | | | ● | |
| MARATHON S | ● | | | ● | | | | ● |
| MX PRO W / ETA | | ● | | | ● | | | ● |
| MX PRO AIR | | ● | | | ● | | | |
| MX PRO COIL | ● | | | | ● | | | |
| MX COMP W / ETA | | ● | | | | ● | | ● |
| MX COMP AIR | | ● | | | | ● | | |
| MX COMP COIL | ● | | | | | ● | | |
| DIRT JUMPER I | | ● | | | ● | | | |
| DIRT JUMPER II | | ● | | | | ● | | |
| DIRT JUMPER III | | ● | | | | | | |
| SHIVER SC | ● | | | ● | | | | ● |
| Z. 1 FR SL | | ● | ● | | | | ● | |
| Z. 1 FR | ● | | | ● | | | | ● |
| Z. 1 DO | ● | | | | ● | | | ● |
| JR T | ● | | | | | ● | | |
| SUPER T PRO | ● | | | ● | | | | |
| SHIVER DC | ● | | | ● | | | | |
| *See paragraph* | *5.1.1* | *5.1.2* | *5.2* | *5.3* | *5.4* | *5.5* | *5.6* | *5.7* |

| | |
|---|---|
| **PL** | Preload |
| **A+** | Positive Air Preload |
| **A-** | Negative Air Preload |
| **REBC** | Rebound cartridge |
| **PRe** | External rebound register |
| **PRi** | Internal rebound register |
| **ECC5** | 5 position extension control cartridge |
| **ETA** | Extension travel adjustment cartridge |

English

## 5.1 Preload

To make the most of the fork's travel, the sag given by the rider's weight must remain between 10% and 20% of the total travel length for the XC forks and between 20% and 30% for the DH forks.
To reach these values, you will need to use the preload adjusters of the springs (see paragraph 5.1.1 for spring forks) or to modify the fork's pressure (see paragraph 5.1.2. for air forks).

### 5.1.1 Spring preload

*The fork is set to the minimum preload by the manufacturer, i.e. the adjuster knob/screw is completely turned counterclockwise. However, the spring is slightly preloaded to help counteractining static load.*

By turning the knob (**A**) on the top of the fork's leg, you can modify the spring preload to adjust the initial setting according to the rider's weight and needs.

- By turning the knob clockwise, the preload spring can be increased up to the maximum value, which corresponds to a spring compression of about 15 mm.
- By turning the knob counterclockwise, you will reduce the preload spring down to the minimum value.

Do not force the adjustment knob past its limits (**A**).

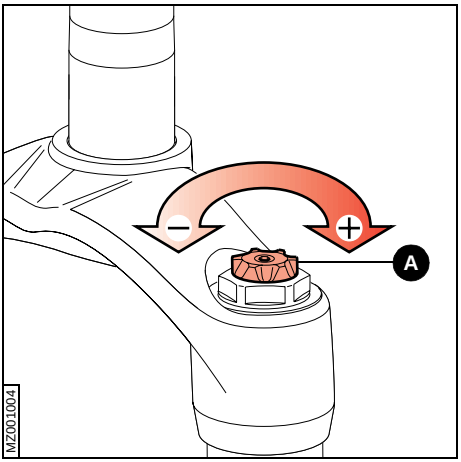


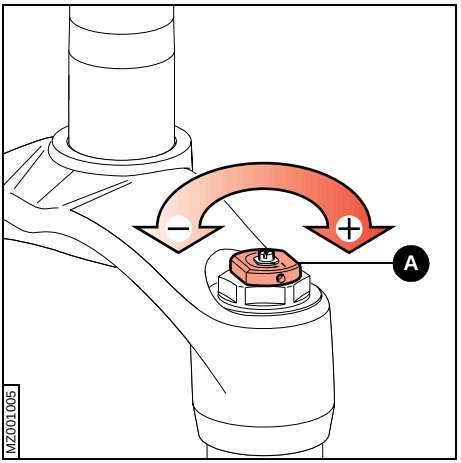


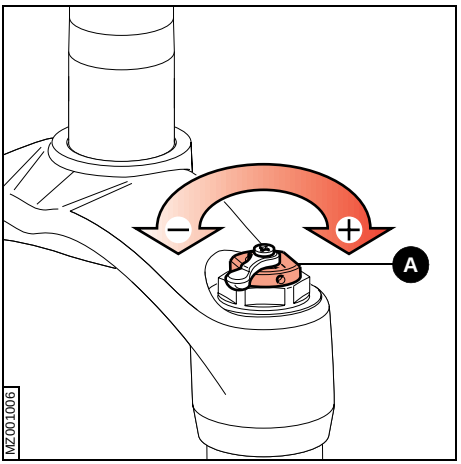


MZ001

English

### 5.1.2 Air preload

To inflate your fork, use only the special MARZOCCHI pump with pressure gauge, which you can buy at the authorized centers. Use of improper tools might lead to improper inflating and cause improper function or damage to the fork itself.

*If you need to reduce the pressure inside the fork's leg, just push lightly on the valve pin, by means of a pointed object. Apply the same preload pressure on both legs.*

By pressurizing air through the valve (**D**), you can adjust the damping of the forces generated during the COMPRESSION phase.
If you increase the pressure inside the fork's leg, you increase the preload. To do so, you need to:

- Remove the dust cap (**A**).
- Fully tighten the threaded pump adapter.
- Inflate air up to the required pressure.
- Refit the dust cap (**A**).

Some forks are provided with a more sophisticated adjustment system and a different air valve: in this case, to adjust the air preload, you will need the supplied dedicated adapter.

**Left leg positive air adjustment**

- Turn the adjuster (**B**) counterclockwise to the fully open position.
- Remove the small dust cap (**C**).
- Fully tighten the pump adapter (**E**) on the valve.
- Inflate air up to the required pressure.

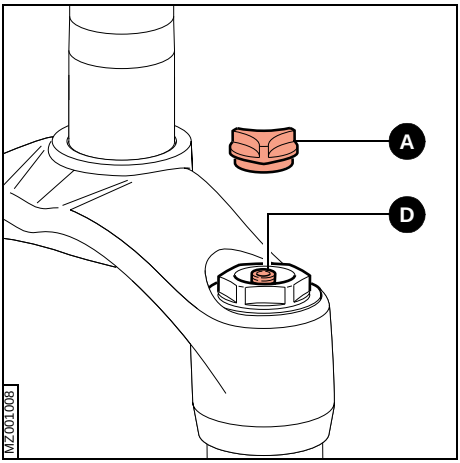


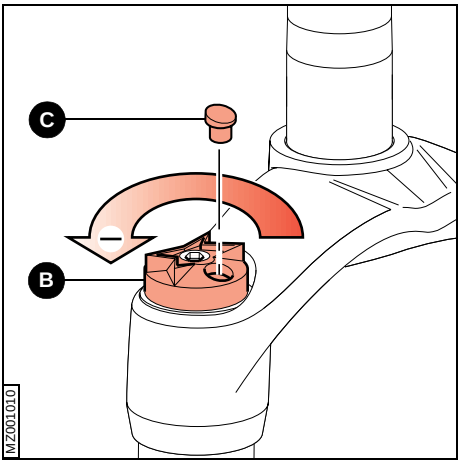


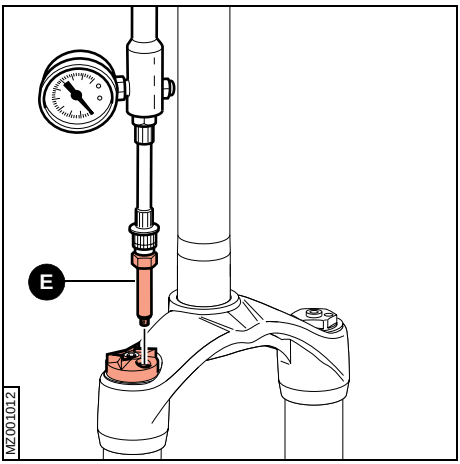


English

**Right leg positive air adjustment**

- Unscrew and remove the dust cap (**A**).
- Fully tighten the pump adapter on the outside valve (**B**).
- Inflate air up to the required pressure.
- Fully tighten the dust cap (**A**).

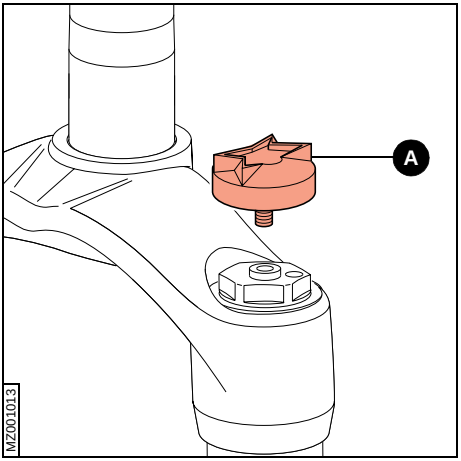


## 5.2 Negative air

To inflate your fork, use only the special MARZOCCHI pump with pressure gauge, which you can buy at the authorized centers. Use of improper tools might lead to improper inflating and cause improper function or damage to the fork itself.

By pressurizing air through the valve, you can adjust the damping of the forces generated during the REBOUND phase.
If you increase the pressure inside the fork's leg, you increase the rebound damping.

To do so, you need to:

- Unscrew and remove the dust cap (**A**).
- Fully tighten the pump adapter on the valve, that is located in the central position.
- Inflate air up to the required pressure.
- Fully tighten the dust cap (**A**).

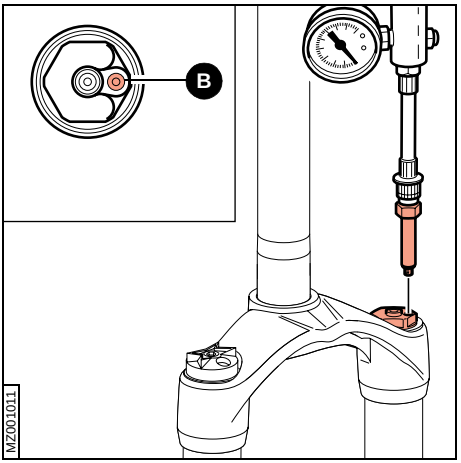


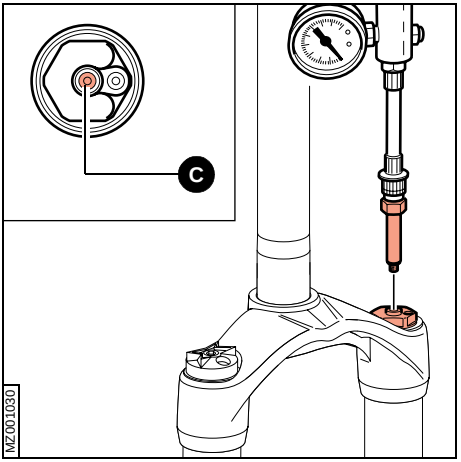


MZ001

English

## 5.3 Cartridge forks rebound adjustment

By rotating the adjustment screw (**A**), located on top of the leg, you can control the fork's REBOUND damping.
By turning the adjustment screw and using a proper small flat tip screwdriver, you can adjust the hydraulic configuration of the inner valves: this means that there will be more or less oil flowing through the valve.

- When turning the adjuster clockwise, you will increase the rebound hydraulic damping, making the fork return slower during the rebound phase.
- When turning the adjuster counterclockwise, you will decrease the rebound hydraulic damping, making the fork more responsive during the rebound phase.

Do not force the adjuster screw (**A**) past its limits.

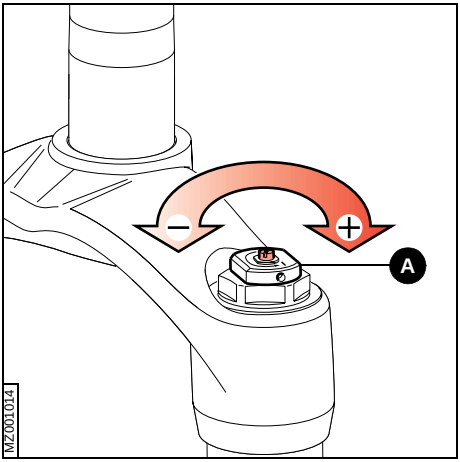


## 5.4 Externally adjustable forks with SSV rebound adjustment

When turning the adjustment knob (**B**) located on the bottom of the fork's leg, you can adjust the damping during the rebound phase.
By turning on the adjustment screw you can modify the hydraulic configuration of inner valves: this means that there will be more or less oil flowing through the valve.

- When turning the adjuster clockwise, you will increase the rebound hydraulic damping, making the fork slower during the rebound phase.
- When turning the adjuster counterclockwise, you will decrease the rebound hydraulic damping, making the fork more responsive during the rebound phase.

Do not force the adjuster screw (**B**) past its limits.

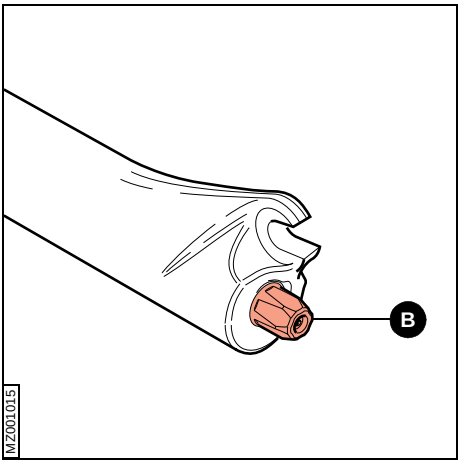

## 5.5 Internally adjustable forks with SSV rebound adjustment

You will find some damping rods where the rebound adjustment is located inside the stanchion tube.

To adjust these forks, you will need to:

- remove the dust cap (**A**) located on the top of the fork's leg.
- insert the supplied hexagon rod (**B**) into the stanchion tube, making sure to center the adjustment seat (**C**).
- When turning the adjuster clockwise, you will increase the rebound hydraulic damping, making the fork slower during the rebound phase.
- When turning the adjuster counterclockwise, you will decrease the rebound hydraulic damping, making the fork more responsive during the rebound phase.

Do not force the adjuster screw (**C**) past its limits.

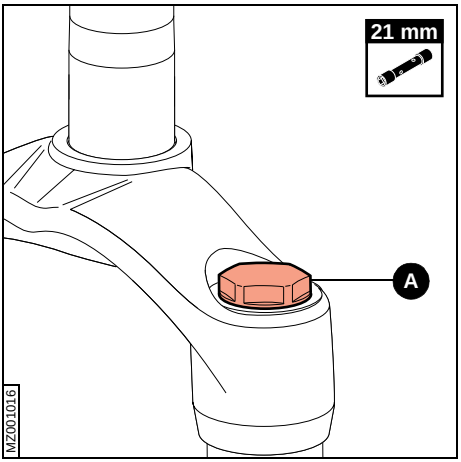


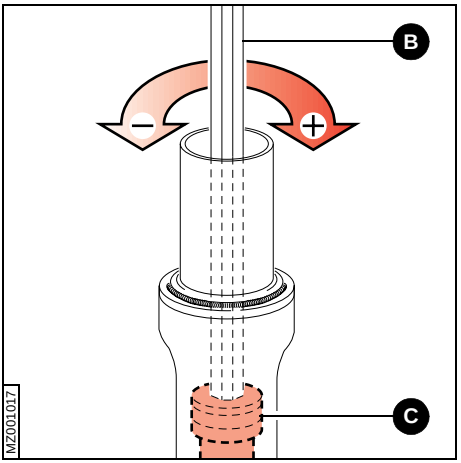

## 5.6 ECC5

The ECC5 cartridge offers on-the-fly adjustment of the rebound damping.
By turning on the adjuster (**A**) you can modify the hydraulic configuration of the inner valves, controlling the flow of more or less oil, up to the “LOCK OUT” position, where no oil flows through.
Adjustment is possible through a 5-position clicker.
**Position 1: “LOCK OUT”**
When the knob is fully tightened clockwise, you will get the maximum rebound damping. In this position the fork’s legs will stay down after impacts; any other impact will make lower the fork’s geometry further.
This position is only suitable for hard, steep climbs.
**Position 2-3-4**
By turning the knob counterclockwise to positions 2-3-4, you will get less rebound resistance accordingly.
**Position 5: MINIMUM EXTENSION DAMPING**
When the knob is fully turned counterclockwise, you will reach the position of minimum extension damping, giving the fork the maximum response.

Do not use the LOCK OUT n.1 position, for any reason, while riding hard downhill, as the fork could not react safely enough when hitting obstacles.

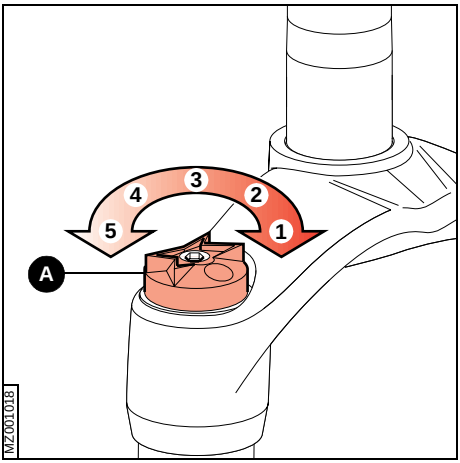


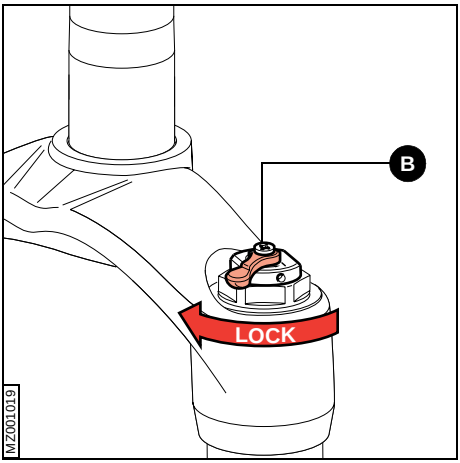


## 5.7 ETA

The ETA cartridge offers on-the-fly adjustment of the rebound damping by reducing the fork’s length while still maintaining 30 mm of travel.
By turning the small lever (**B**) clockwise you will activate the ETA cartridge function.
By turning the small lever (**B**) counterclockwise, you will bring your fork to its normal function and the travel-reducing device will be no longer be engaged.

Do not use the ETA device, for any reason, while riding hard downhill, as the fork could not react safely enough when hitting obstacles.

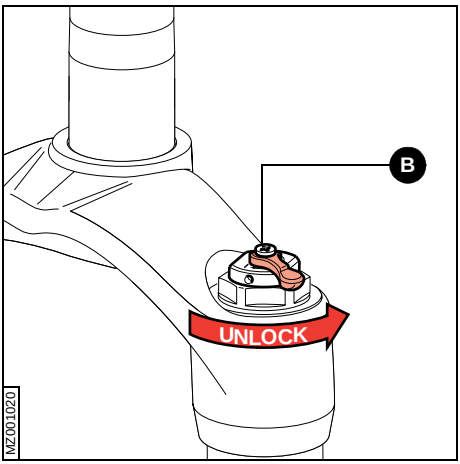




English

# 6 TABLES

## 6.1 Table 1 – Tightening Torques

| Components to be tightened | Tightening Torque (Nm) |
|---|---|
| Wheel axle bolts | 15 ± 1 |
| Wheel axle hex bolts | 10 ± 1 |
| Fork's upper caps | 20 ± 1 |
| Bolts for fender tightening | 6 ± 1 |

## 6.2 Table 2 – Positive air pressure

| Rider's weight | | Positive air pressure | |
|---|---|---|---|
| 120 ÷ 155 lbs | 55 ÷ 70 kg | 30 ÷ 40 psi | 2.0 ÷ 2.75 bar c.a |
| 155 ÷ 180 lbs | 70 ÷ 80 kg | 35 ÷ 45 psi | 2.40 ÷ 3.10 bar c.a |
| 180 ÷ 210 lbs | 80 ÷ 95 kg | 42 ÷ 52 psi | 2.90 ÷ 3.80 bar c.a |
| 210 ÷ 220+ lbs | 95 ÷ 100+ kg | 52 ÷ 65 psi | 3.60 ÷ 4.5 bar c.a |

## 6.3 Table 3 – Negative air pressure

| Negative air pressure | |
|---|---|
| 0 ÷ 150 psi | 0 ÷ 10,3 bar c.a |

## NOTES

Pagina lasciata intenzionalmente bianca - Intentionally blank page
Page laissée blanche intentionnellement - Absichtlich leer gelassene Seite - Página intencionalmente vacía

**Cod. 900861>A**

Maggio - 2002 - Edizione 00

MARZOCCHI S.p.A.
Via Grazia, 2
40069 Lavino di Zola Predosa - Bologna
ITALY
Telefono - +39 - (0)51 - 61 68 711
Telefax - +39 - (0)51 - 75 88 57